AirBORNe®

A750i Transport Incubator

Operator Manual

international BIOMEDICAL®

A750i
Infant Transport Incubator System with Optional PulseOx
Operator's Manual

- ***Phone: (512) 873-0033***
- ***Fax: (512) 873-9090***
- ***E-Mail: sales@int-bio.com***
- ***Website: http://www.int-bio.com***

- ***Mailing address:***

  International Biomedical
  8206 Cross Park Dr.
  Austin, TX 78754
  USA

- ***Authorized representative in Europe for Regulatory Affairs:***

  Emergo Europe
  Westervoortsedijk 60
  6827 AT
  Arnhem, The Netherlands

TABLE OF CONTENTS

SECTION 1: GENERAL INFORMATION 3
- INTRODUCTION 3
- CLASSIFICATION 3
- SAFETY SUMMARY 4
- IMPORTANT SAFETY CONSIDERATIONS 4
- SYMBOLS 9

SECTION 2: OPERATING INSTRUCTIONS 10
- FRONT PANEL DISPLAY FEATURES 10
- SIDE PANEL FEATURES 15
- POWER FEATURES 16
- POWERING UP THE INCUBATOR 18
- POWERING OFF THE INCUBATOR 18
- DISPLAY MODES 19
- TEMPERATURE CONTROL 19
- SETTING THE INFANT CHAMBER AIR TEMPERATURE 19
- PULSE OXIMETER AND OXYGEN MONITOR CONTROL (OPTIONAL FEATURE) 20
- ALARMS / INDICATORS 20
- EXTERNAL LIGHTING 23
- SKIN TEMPERATURE PROBE 23

SECTION 3: PULSE OXIMETRY (OPTIONAL FEATURE) 24
- PULSE OXIMETER PRINCIPLES OF OPERATION 24
- PULSE OXIMETER SET-UP INSTRUCTIONS 26
  - INITIAL SET-UP 26
  - SETTING HIGH AND LOW %SpO_2 ALARMS 26
  - SETTING HIGH AND LOW PULSE RATE ALARMS 27
  - SETTING THE ALGORITHM MODE (MASIMO ONLY) 27
  - SETTING THE AVERAGING MODE (MASIMO ONLY) 28
  - SETTING THE PERFUSION INDEX (MASIMO ONLY) 29
- OPERATIONAL ALARMS AND WARNINGS 29
- TEST OF OPERATIONAL ALARMS 31
- PULSE OXIMETRY SENSORS 31
- PULSE OXIMETRY TESTERS / SIMULATORS 32

SECTION 4: OXYGEN MONITOR (OPTIONAL FEATURE) 33
- OXYGEN MONITOR PRINCIPLES OF OPERATION 33
- OXYGEN MONITOR SET-UP INSTRUCTIONS 34
  - INITIAL SET-UP 34
  - SETTING HIGH AND LOW OXYGEN ALARMS 34
  - OXYGEN MONITOR CALIBRATION 35
- OPERATIONAL ALARMS AND WARNINGS 36
- TEST OF OPERATIONAL ALARMS 36

TABLE OF CONTENTS

OXYGEN SENSOR 37
SECTION 5: PREVENTATIVE MAINTENANCE 38
DAILY MAINTENANCE 38
OPERATIONAL CHECK 38
AIR / OXYGEN SYSTEM 39
INFANT CHAMBER CHECK 40
CART AND ACCESSORIES 40
SENSORS AND CABLES (OPTIONAL EQUIPMENT) 40
CLEANING OF INCUBATOR AND CHAMBER 41
CLEANING OF CABLES (OPTIONAL EQUIPMENT) 41
CLEANING OF PULSE OXIMETRY SENSOR (OPTIONAL EQUIPMENT) 41
CLEANING OF OXYGEN SENSOR (OPTIONAL EQUIPMENT) 41
MONTHLY MAINTENANCE 42
BATTERY CARE 42
PRODUCT DISPOSAL / RECYCLING 42
SECTION 6: TROUBLESHOOTING 43
GENERAL TROUBLESHOOTING 43
MAIN DISPLAY ERROR CODES 44
PULSE OXIMETER AND OXYGEN MONITOR FAILURE CODES (OPTIONAL FEATURE) 44
SECTION 7: SPECIFICATIONS 47
ESSENTIAL PERFORMANCE 47
GENERAL MECHANICAL SPECIFICATIONS 47
ELECTRICAL SPECIFICATIONS 48
EMC SPECIFICATIONS 49
OPERATIONAL SPECIFICATIONS 49
PULSE OXIMETER SPECIFICATIONS (OPTIONAL FEATURE) 49
OXYGEN MONITOR SPECIFICATIONS (OPTIONAL FEATURE) 51
OPERATING, STORAGE, AND TRANSPORT ENVIRONMENT 52
SECTION 8: WARRANTY 53
SECTION 9: SYSTEM DOCUMENTATION 54
EUROPEAN REGULATORY AFFAIRS REPRESENTATIVE 54
PARTS AND ACCESSORIES 54

SECTION 1: GENERAL INFORMATION

INTRODUCTION

The International Biomedical Model A750i Infant Transport Incubator with optional PulseOx (referred to herein as the incubator) provides a thermally regulated environment to support an infant's temperature requirements and has the capability to monitor vital information during transport. The pulse oximeter and oxygen monitor measure pulse rate, oxygen saturation, and oxygen concentration and allow the user to configure high and low alarm settings. The incubator circulates warmed air throughout the infant chamber to maintain the temperature at a user-selected setpoint. Chamber doors and hand ports provide quick and easy access to the infant. Positioning straps are provided to limit infant movement within the infant chamber. There are no known contraindications associated with the incubator.

NOTE: *The Pulse oximetry and oxygen monitoring is only available if the PulseOx version of the incubator was purchased.*

This operator's manual is designed to introduce the user to key features of the incubator, including safety issues, instructions for use, equipment maintenance and contact information. The manual should be read and understood by all users before using the transport incubator. Additional information may also be found in the service manual for the incubator.

CLASSIFICATION

According to the standard EN60601-1 of the International Electrotechnical Commission, Medical electrical equipment, Part 1: General requirements for safety, the infant transport incubator is classified as follows:

- Class I / Internally Powered, according to the type of protection against electric shock
- Type B, according to the degree of protection against electric shock (i.e. the patient may not be electrically isolated from earth)
- Ordinary, according to the degree of protection against harmful ingress of water
- Equipment is not suitable for use in the presence of a flammable anesthetic mixture with air or with oxygen or nitric oxide.
- Continuous operation for the mode of operation

The pulse oximeter cables and sensors are classified as type BF, per the EN60601-1 electrical standard.

The skin temperature probe is classified as type BF, per EN60601-1 electrical standard (systems with optional PulseOx).

The skin temperature probe is classified as type B, per EN60601-1 electrical standard (systems without optional PulseOx).

SECTION 1: GENERAL INFORMATION

SAFETY SUMMARY

The incubator is designed to be used by trained clinical users and/or biomedical engineers and operated in a manner consistent with the instructions contained in this manual. Refer to any additional training, procedures, requirements, or documentation beyond those identified here for operation and policies required within the institution. All personnel operating the incubator must be familiar with the warnings and operating procedures contained in this manual. International Biomedical is not to be held responsible if the incubator is used in a manner inconsistent with the instructions herein.

IMPORTANT SAFETY CONSIDERATIONS

The incubator has been tested and found to comply with limits for electromagnetic interference and susceptibility as defined by EN60601-1-2. However, this equipment can radiate radio frequency (RF) energy and may cause harmful interference to other devices. The incubator may also be affected by interference from other devices. If RF interference is suspected, relocate or shield the incubator to reduce or eliminate the effects.

Within certain governmental jurisdictions, all interconnected accessory equipment must be labeled by an approved testing laboratory. After interconnection with accessory equipment, risk (leakage) current and grounding requirements must be maintained.

Safety concerns or additional pertinent information will be displayed using warnings, cautions, and notes, having the following significance:

WARNING: **Maintenance or operating procedure, technique, etc., which may result in personal injury or loss of life if not carefully followed.**

CAUTION: Maintenance or operating procedure, technique, etc., which may result in patient harm or damage to equipment if not carefully followed.

NOTE: *Maintenance or operating procedure, technique, etc., which is considered essential to emphasize.*

The principal **WARNING** and **CAUTION** notices to be observed in use of this incubator are brought together here for emphasis.

SECTION 1: GENERAL INFORMATION

WARNINGS

- OBSERVE BEST PRACTICE: The instructions in this manual in no way supersede established medical procedures or staff preference concerning patient care.
- ENSURE UNIT IS PROPERLY GROUNDED: To ensure grounding reliability, only connect the power cord to a properly grounded, 3-wire hospital grade outlet of the proper voltage and frequency. DO NOT USE EXTENSION CORDS. If the integrity of the connection is in doubt, the incubator should be operated from its internal battery.
- EXPLOSION HAZARD: Do not use the examination light, the pulse oximeter, or oxygen monitor in the presence of flammable anesthetics or other flammable gases.
- USE OF OXYGEN INCREASES FIRE DANGER: Spark-producing auxiliary equipment should not be placed in or near the transport incubator.
- Avoid direct sunlight or radiant heat, which can cause a dangerous increase in chamber air temperature.
- Avoid eye exposure. Direct light exposure may cause eye damage. Infants must wear eye protection.
- The use of oxygen may increase the noise level within the infant chamber.
- Air and oxygen tanks are pressurized and must be properly secured.
- The transport incubator is Type B equipment and the baby may not be electrically isolated from earth. Care must be taken that additional equipment connected to the baby is electrically safe. To ensure patient electrical isolation, connect only to other equipment with electronically isolated circuits.
- Do not change the lamp and touch the patient simultaneously.
- When the infant tray is removed, do not touch exposed circuitry and patient simultaneously.
- This incubator was calibrated with the infant chamber originally supplied. If this chamber is exchanged for an infant chamber of a different configuration or size, the temperature calibration will be affected. Consult International Biomedical before returning the incubator to service.
- The incubator should be turned off and AC or DC power disconnected when cleaning.

- The use of devices which radiate high intensity electrical fields may affect the operation of the transport incubator. Constant assessment of the patient and all life support equipment is mandatory whenever interfering devices are operating on or near patient.
- When using the transport incubator adjacent to or stacked with other equipment, observe the operation of the transport incubator and the other equipment to ensure normal operation.
- Portable RF communications equipment (including peripherals such as antenna cables and external antennas) should be used no closer then 30 cm to any part of the transport incubator and associated cables. Otherwise, degradation of the performance of this equipment could occur.
- When the incubator is attached to a Ferno 146 Collapsible Cart, the two highest positions should not be used as they can cause a tip hazard.
- Do not use the pulse oximeter or oximetry sensors during magnetic resonance imaging (MRI) scanning. Induced current could potentially cause burns. The pulse oximeter may affect the MRI image and the MRI unit may affect the accuracy of the oximetry results.
- If using pulse oximetry during full body irradiation, keep the sensor out of the irradiation field. If the sensor is exposed to irradiation, the reading might be inaccurate or the unit might read zero for the duration of the active irradiation period.
- The pulse oximeter should NOT be used as an apnea monitor.
- If an alarm condition (other than exceptions listed herein) occurs while the MUTE button is activated, only visual alarm indicators will be activated.
- Pulse rate measurement is based on the optical detection of a peripheral flow pulse and therefore may not detect arrhythmias. The pulse oximeter should not be used as a replacement or substitute for ECG based arrhythmia analysis.
- Connecting equipment to the outlets on this device creates a medical electrical system and the user is responsible for continued compliance with the requirements of IEC 60601-1.
- Do not modify this equipment without proper authorization from International Biomedical.
- An Infant Transport Incubator should be used by appropriately trained personnel and under the direction of qualified medical staff familiar with currently known risks and benefits of Infant Transport Incubator use.

- When this incubator is operated on battery in low ambient temperatures, the thermal cover must be used.
- Skin temperature probe is not a rectal probe. The skin temperature sensor is not to be used as a rectal probe.
- Do not use liquids in or around the transport incubator.

CAUTIONS

- U. S. Federal and Canadian law restricts this device to sale by or on the order of a physician or other licensed medical practitioner. Outside Canada and the U. S., check with local laws for applicable restrictions.
- Use of sharp objects on Front Display Panel will cause permanent damage and will void warranty.
- Do not touch, press, or rub the display panels with abrasive cleaning compounds, instruments, brushes, rough-surface materials, or bring them into contact with anything that could scratch the panel.
- Use an oxygen analyzer when oxygen is delivered to the infant.
- The incubator electronics contain static sensitive components that can be damaged by improper handling. Use approved grounding techniques for work areas and service personnel.
- The infant tray grounding tabs are sharp; use care when cleaning air flow system.
- Do not move the incubator by pushing on the infant chamber. The infant chamber is not designed to sustain the forces to push the incubator. Stress fractures in the infant chamber can occur.
- DO NOT leave the 12 volt cord attached to the DC connector of the incubator.
- Do not overtighten the infant chamber screws. Do not strip the aluminum into which these screws are threaded.
- Do not drip cleaning solution through the holes where the swell latches fit into the air flow assembly.
- The incubator MUST be plugged into AC power and the battery recharged after any battery usage. The battery will sustain damage if drained of power and not placed on recharge soon.

- CLEANING AND CARE: Do not autoclave, pressure sterilize, or gas sterilize the incubator, cables, or sensors. Use cleaning solutions sparingly as excessive solution can flow into the incubator and cause damage to internal components. Do not soak or immerse the incubator or sensors in any liquid. Do not use petroleum-based, alcohol, acetone, or other harsh solvents. See cleaning instructions of reusable sensors and cables in directions for their use.
- Check alarm limits each time the system is used to ensure that they are appropriate for the patient being monitored.
- Use only parts, accessories, transducers, and cables designated by International Biomedical for use with the transport incubator. Cables and accessories other than those supplied by International Biomedical may result in unacceptable operation of the transport incubator and will void the equipment warranty.
- If a sensor or cable is damaged in any way, discontinue use immediately.
- The Maxtec MAX-250E oxygen sensor is a sealed device containing a mild acid electrolyte, lead (Pb), and lead acetate. Lead and lead acetate are hazardous waste constituents and should be disposed of properly, or returned to Maxtec or International Biomedical for proper disposal or recovery.
- Pulse oximeter probes and cables are designed for use with specific monitors. Only use Masimo sensors and patient cables for Masimo pulse oximetry model. Only use Nellcor sensors and patient cables for Nellcor pulse oximetry model. Verify the compatibility of the monitor, sensor, and cable before use, otherwise patient injury can result.
- Only use International Biomedical cable and Maxtec sensor for oxygen monitoring.
- Calibrate the oxygen sensor daily when in use or if environmental conditions change significantly (i.e., Temperature, Humidity or Barometric Pressure).
- Dropping or severely jarring the oxygen sensor after calibration may shift the calibration point enough to require recalibration.
- Oxygen sensor and pulse oximetry cables must be contained within cart or otherwise secured when not in use.

SECTION 1: GENERAL INFORMATION

SYMBOLS

The following symbols appear in the incubator documentation and labels. These internationally recognized symbols are defined by the International Electrotechnical Commission and International Organization for Standardization, IEC 417A, IEC 878, and ISO 7000.

	Keep away from rain
	On (power: connection to the mains)
	Off (Standby)
(Blue Background)	Attention, consult accompanying documents
	Alternating Current
	Direct Current
	Protective earth (ground)
	Type B equipment (EN60601-1)
	Type BF equipment (EN60601-1)
	Recycle or dispose of properly, contains sealed lead batteries

SYMBOL	MANUAL REFERENCE	EXPLANATION
	ALARM	Designates location of alarms on front panel
°C	HIGH TEMP	High temperature alarm indicator
SYS	SYS FAIL	System failure alarm indicator
	AIR FLO	Air flow blockage alarm indicator
SENS	SENS FAIL	Primary temperature sensor malfunction alarm indicator
	PWR FAIL	Incubator not connected to AC nor DC, and battery power is below 10.1 volts
	MUTE	Mute button silences audible alarms for approximately 1 minute
°C	BABY TEMP	Baby probe temperature mode
	BAT CHG	Battery charging indicator
	AC OP	Incubator connected to AC power
	DC OP	Incubator connected to DC power
	BAT OP	Incubator operating on internal battery due to no external power connected
	LOW BAT	Low battery indicator

SECTION 2: OPERATING INSTRUCTIONS

This section contains operating procedures for the incubator. The incubator should be operated with external power whenever possible. The incubator's battery should be fully charged prior to use by connecting the unit to an AC power supply for at least 8 hours. When not in use, the incubator should be plugged into an AC power source in order to recharge the battery. It is not recommended for the incubator to be on and heating when not in use as this will shorten the life of system components.

WARNING: **Avoid direct sunlight or radiant heat which can cause a dangerous increase in chamber air temperature.**

FRONT PANEL DISPLAY FEATURES

The incubator controls are located on a front display panel. Figure 2 - 1 shows a drawing of the membrane panel and highlights important features. A description of each of the features follows.

CAUTION: Use of sharp objects on Front Display Panel will cause permanent damage and will void warranty.

CAUTION: Do not touch, press, or rub the display panels with abrasive cleaning compounds, instruments, brushes, rough-surface materials, or bring them into contact with anything that could scratch the panel.

Figure 2 - 1 Front Display Panel

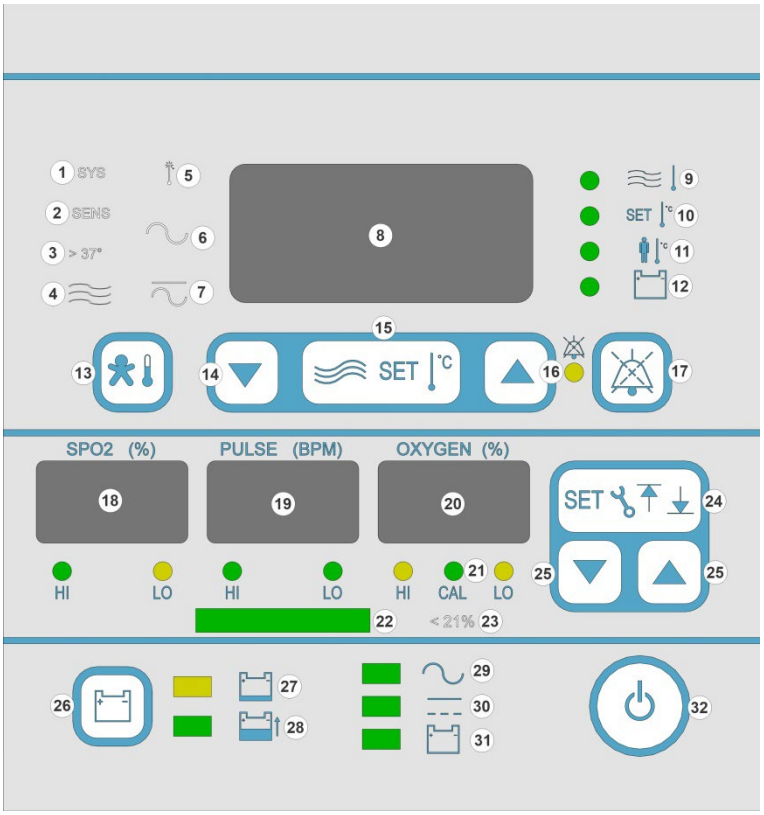

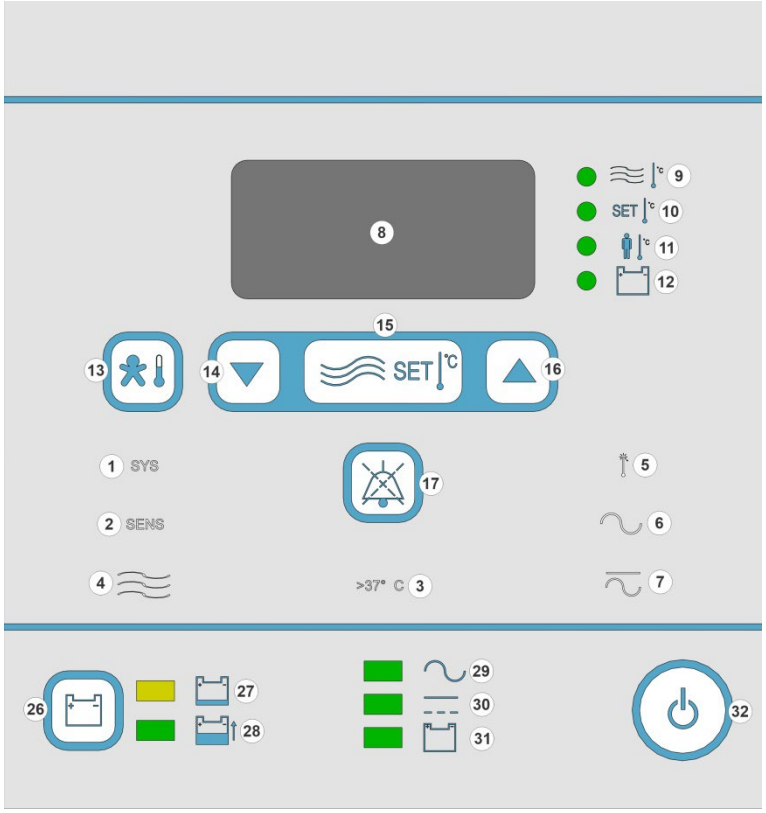

1. System Fail Alarm Indicator (***SYS FAIL***)
2. Sensor Fail Alarm Indicator (***SENS FAIL***)
3. Air Temperature Setpoint >37° C Indicator
4. Air Flow Alarm Indicator (***AIR FLO***)
5. High Temperature Indicator (***HIGH TEMP***)
6. AC Fail Indicator
7. Power Fail Indicator (***PWR FAIL***)
8. Main Display Screen
9. Air Temperature Display Indicator
10. Set Air Temperature Indicator
11. Baby Temperature Display Indicator
12. Battery Life Display Indicator
13. Baby Temp. Display Button (***BABY TEMP***)
14. Set Air Temperature Down Button
15. Set Air Temperature Button
16. Set Air Temperature Up Button
17. Mute Button and Indicator (***MUTE***)

* 18. Oxygen Saturation Display Screen
* 19. Pulse Rate Display Screen
* 20. Oxygen Display Screen
* 21. Oxygen Sensor Cal. Indicator
* 22. Pulse Strength Indicator
* 23. Oxygen Setpoint Low Indicator
* 24. PulseOx SET Button
* 25. PulseOx Up / Down Arrows

26. Battery Life Display Button
27. Low Battery Indicator (*LOW BAT*)
28. Batt. Charging Indicator (*BAT CHG*)
29. AC Power Indicator (*AC OP*)
30. DC Power Indicator (*DC OP*)
31. Battery Power Indicator (*BAT OP*)
32. Power Button

* ***NOTE:*** *Items 18 - 25 are features exclusive to the PulseOx version of the incubator.*

1: System Fail Alarm Indicator (SYS FAIL)

Yellow LED indicator that illuminates when the displayed temperature exceeds 39.0° C

2: Sensor Fail Alarm Indicator (SENS FAIL)

Yellow LED indicator that illuminates when the temperature being sensed by the primary temperature sensor is outside the normal temperature range of the incubator (10 - 45° C)

3: Air Temperature Setpoint > 37° C Indicator

Yellow LED that illuminates when the chamber air temperature setpoint is set above 37° C

4: Air Flow Alarm Indicator (AIR FLO)

Yellow LED indicator that illuminates when the air flow is blocked

5: High Temperature Alarm Indicator (HIGH TEMP)

Yellow LED indicator that illuminates when the displayed temperature exceeds 38.5° C

6: AC Fail Indicator

Yellow LED indicator that illuminates when the incubator is unplugged from an AC power source

7: Power Fail Indicator (PWR FAIL)

Yellow LED indicator that illuminates when the incubator is unplugged from AC and DC power and the internal battery voltage falls below 10.1 volts

8: Main Display Screen

Seven segment digital display that displays chamber air temperature, baby temperature, battery life status, and HI or LO temperature alarms

9: Air Temperature Display Indicator

Indicator is illuminated when the Main Display Screen displays the current air temperature in the infant chamber.

10: Set Air Temperature Indicator

Indicator is illuminated when the user is adjusting the infant chamber air temperature set point.

11: Baby Temperature Display Indicator

Indicator is illuminated when the ***BABY TEMP*** button is pressed and held.

12: Battery Life Display Indicator

Indicator is illuminated when the Battery Life Display button is pressed and held.

13: Baby Temperature Button (BABY TEMP)

When button is pressed, the Main Display Screen will display the temperature measured by the baby temperature probe.

14: Set Air Temperature Down Button

Button will decrease the setpoint temperature in 0.1° C increments.

15: Set Air Temperature Button

When button is pressed, the infant chamber air temperature can be adjusted.

16: Set Air Temperature Up Button

Button will increase the setpoint temperature in 0.1° C increments.

17: Mute Button (MUTE)

Button is used to silence audible alarms for approximately one minute. The warning LED to the left of the Mute Button will be illuminated for the duration of the mute cycle.

NOTE: *The LED is only available with the PulseOx version of the incubator.*

18: Oxygen Saturation Display Screen (Optional Feature)

Screen displays functional oxygen saturation (units: percent).

19: Pulse Rate Display Screen (Optional Feature)

Screen displays pulse rate (units: beats per minute).

20: Oxygen Display Screen (Optional Feature)

Screen displays the oxygen concentration (units: percent).

21: Oxygen Sensor Cal. Indicator (Optional Feature)

Indicator is illuminated when the user is calibrating the oxygen sensor.

22: Pulse Strength Indicator (Optional Feature)

Bar graph will illuminate at the rate shown on the Pulse Rate Display Screen with a calculated intensity.

23: Oxygen Setpoint Low Indicator (Optional Feature)

Indicator is illuminated when the oxygen concentration lower alarm limit is set to a value below 21%.

24: PulseOx SET Button (Optional Feature)

Button used to enter modes to set pulse oximetry and oxygen monitor alarm limits and to calibrate the oxygen sensor

25: PulseOx Up and Down Arrows (Optional Feature)

Buttons used to set pulse oximetry and oxygen monitoring variables

26: Battery Life Display Button

Button used to display the status of the battery on the Main Display Screen

27: Low Battery Indicator (LOW BAT)

Yellow LED indicator that illuminates when the battery voltage is less than 11 volts

28: Battery Charging Indicator (BAT CHG)

Green LED indicator that illuminates when the battery is actively being charged

29: AC Power Indicator (AC OP)

Green LED indicator that illuminates when the incubator is on and connected to external AC power

30: DC Power Indicator (DC OP)

Green LED indicator that illuminates when the incubator is on and connected to external DC power

31: Battery Power Indicator (BAT OP)

Green LED indicator that illuminates when the incubator is on and no external power is applied, indicating the unit is operating off of internal battery power

32: Power Button

Button is used to turn the incubator on and off. When turned on, it enables the temperature display, pulse oximetry and oxygen monitor displays, alarms, and infant chamber air temperature control.

SIDE PANEL FEATURES

The side panel of the incubator is where the power cords, sensors, and probes connect, and where circuit breakers are located. Figure 2 - 2 shows a drawing of the side panel and highlights important features. A description of each of the features follows.

Figure 2 - 2 Side Panel

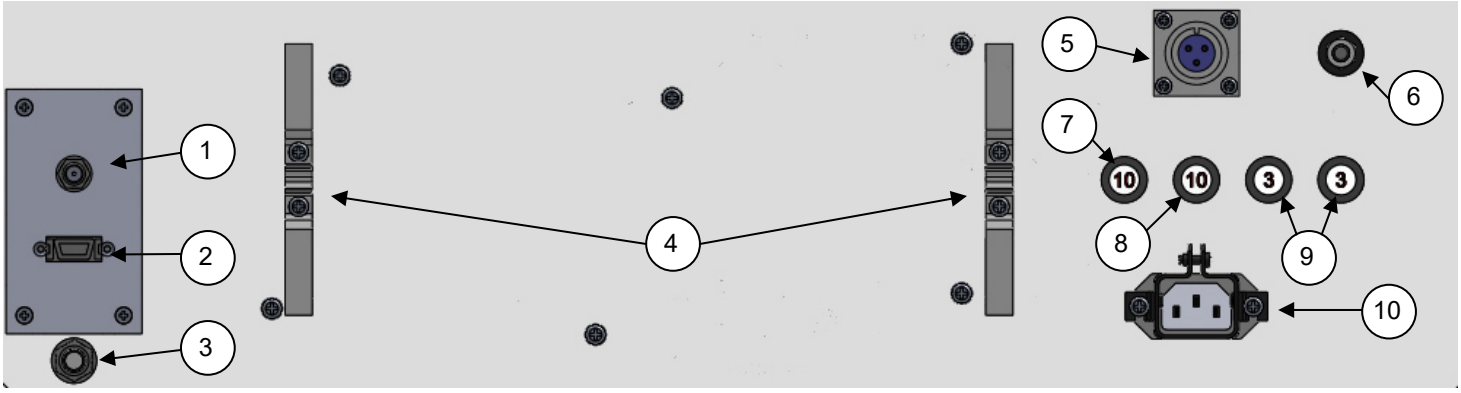

* 1. Oxygen Sensor Connector
* 2. Pulse Oximeter Sensor Connector
3. Baby Temperature Cable Connector
4. Power Cord Holder
5. DC Power Cord Connector
6. Potential Equalization Stud
7. Battery Circuit Breaker
8. External Circuit Breaker
9. AC Circuit Breakers
10. AC Power Cord Connector

* ***NOTE:*** *Items 1 & 2 are features exclusive to the PulseOx version of the incubator.*

1: Oxygen Sensor Connector (Optional Feature)

Connection point for the oxygen sensor cable

2: Pulse Oximeter Sensor Connector (Optional Feature)

Connection point for the pulse oximeter sensor cable (Masimo or Nellcor)

3: Baby Temperature Cable Connector

Connection point for the baby temperature probe cable

4: Power Cord Holder

When not in use, power cord to be wrapped around these holders

5: DC Power Cord Connector

Connection point for the DC power cord

The individual conductors are labeled A (not used), B (negative), and C (positive).

6: Potential Equalization Stud

This stud is used for potential equalization.

7: Battery Circuit Breaker

10 Amp circuit breaker connected to the battery circuit

8: External Circuit Breaker

10 Amp circuit breaker connected to the external DC input circuit

9: AC Circuit Breakers

3 Amp circuit breakers connected to the AC input circuit

10: AC Power Cord Connector

Connection point for the AC power cord

POWER FEATURES

The incubator can be operated in one of three power modes: external AC power, external DC power, or internal battery power.

AC Power Mode

AC power can be supplied using either 120 V or 230 V external AC power, depending on the incubator configuration. When operating in AC power mode, the ***AC OP*** indicator (Figure 2 - 1, item 29) will be illuminated. AC power has priority over all other power sources, external or internal. AC power should be used for warming the incubator in preparation for transport and must be used to recharge the battery.

WARNING: **ENSURE UNIT IS PROPERLY GROUNDED: To ensure grounding reliability, only connect the power cord to properly grounded, 3-wire hospital grade outlet of the proper voltage and frequency. DO NOT USE EXTENSION CORDS. If the integrity of the available external power sources is in doubt, the incubator should be operated from its internal battery.**

DC Power Mode

DC power can be supplied using a 12 V power source. When operating in DC power mode, the ***DC OP*** indicator (Figure 2 - 1, item 30) will be illuminated. External DC power is supplied through a 3 conductor circular connector located on the back of the incubator (Figure 2 - 2, item 5). DC power has priority over internal battery power. While operating in DC power mode, the battery will not be charged.

Battery Power Mode

Battery power will automatically be selected when neither AC power nor DC power are available. When operating on internal battery, the ***BAT OP*** indicator (Figure 2 - 1, item 31) will be illuminated. Connecting AC or DC power will supersede battery power operation. The battery charger operates continually when the incubator is connected to an AC power source. When charging, the green ***BAT CHG*** indicator (Figure 2 - 1, item 28) will be illuminated. The rate at which the battery charges decreases when the incubator is powered on. A significantly low AC line voltage will also decrease the rate of battery charge. It takes approximately 8 hours to fully charge a completely discharged standard 26 ampere-hour battery when the incubator is supplied AC power and is powered down. If the incubator is on and warming up, the battery charge time is two to three times longer. The incubator will maintain an infant chamber temperature of 37° C for three hours on a fully charged battery with an ambient temperature of 20° C.

NOTE: *When not in use, the incubator should be plugged into an AC source to recharge the battery. See SECTION 5 on BATTERY CARE.*

To determine how much battery life is left, the Battery Life Display Button (Figure 2 - 1, item 26) can be pressed to display the status of the battery on the Main Display Screen (Figure 2 - 1, item 8). In this mode, the Battery Life Display Indicator (Figure 2 - 1, item 12) will be illuminated. When operating on AC power, the Main Display Screen will indicate the state of charge of the battery as an estimated percentage (to the nearest 20%). A fully charged battery will display 100% and a battery which has almost reached its safe discharge level will display 0%. When the incubator is operating from battery power or external DC power, the Main Display Screen will indicate the battery voltage (to the nearest 0.3 volt). Regardless of the power source, error code E03 will be reported if the battery voltage is outside of the 9.0 volt to 14.5 volt range. To continue normal operation, the battery voltage must be above 10 ± 0.3 volts.

For general operation, the use of external AC or DC power is *HIGHLY RECOMMENDED*. The internal battery should be used only when the incubator has no other energy source available.

Power Interruption / Failure

If external AC or DC power is lost while the incubator is powered on, the incubator will automatically switch over to battery power with no interruption in incubator performance or degradation of pulse oximeter and/or oxygen monitor accuracy. In the event of total power loss, all user-programmed settings (e.g. temperature setpoint, alarm limits) will default to the most recently programmed values.

POWERING UP THE INCUBATOR

To turn the incubator on, press the Power Button (Figure 2 - 1, item 32) on the lower right hand corner of the Front Display Panel. When the incubator is turned on, all functional LEDs on the display panel will illuminate and the audible alarm will sound. This Power-up Indicator Test will last approximately two seconds after which the Main Display Screen will display the infant chamber air temperature set point. The PulseOx Display screen will alternately display the HI/LO alarm settings for 16 seconds. To interrupt the PulseOx display, press the PulseOx settings button. After the initial start-up, the PulseOx display will be in the “Off” status. After 5 seconds, if no buttons have been pressed, the display will change and show the actual measured infant chamber air temperature. The incubator will immediately attempt to regulate the infant chamber air temperature to the last set point stored in memory (refer to SECTION 2, SETTING THE INFANT CHAMBER AIR TEMPERATURE, for instructions on setting the temperature).

One of three power source indicators will be illuminated, indicating which source is currently powering the incubator.

- AC power indicator (Figure 2 - 1, item 29)
- External DC power indicator (Figure 2 - 1, item 30)
- Internal battery power indicator (Figure 2 - 1, item 31)

POWERING OFF THE INCUBATOR

To turn the incubator off, press the Power Button (Figure 2 - 1, item 32) on the lower right hand corner of the Front Display Panel. The Power Button provides the means of electrically isolating the incubator circuits from supply mains simultaneously on all poles.

DISPLAY MODES

The incubator has the ability to display both infant chamber air temperature and infant temperature. When the incubator is initially powered on, the Main Display Screen (Figure 2 - 1, item 8) displays the setpoint temperature for a few seconds and then defaults to displaying the current air temperature in the infant chamber. In this mode, the Air Temperature Display Indicator (Figure 2 - 1, item 9) is illuminated. To display the infant temperature, the ***BABY TEMP*** button (Figure 2 - 1, item 13) can be pressed. In this mode, the Baby Temperature Display Indicator (Figure 2 - 1, item 11) illuminates and the infant temperature is displayed on the Main Display Screen. When the button is released, the display reverts back to infant chamber air temperature.

TEMPERATURE CONTROL

The infant chamber air temperature can be controlled from the front display panel on the incubator. When the Set Air Temperature Button (Figure 2 - 1, item 15) is pressed, the user can use the up and down arrows (Figure 2 - 1, items 14 & 16) to adjust the temperature setpoint (in 0.1° C increments). When in this mode, the Set Air Temperature Indicator (Figure 2 - 1, item 10) will be illuminated. To maximize heating efficiency, the incubator should be connected to AC power while heating to desired setpoint. Running the incubator on its internal battery will drastically increase the required time to reach the desired temperature setpoint. The baby temperature cannot be controlled but can be displayed on the Main Display Screen by pressing the ***BABY TEMP*** button (Figure 2 - 1, item 13).

SETTING THE INFANT CHAMBER AIR TEMPERATURE

To adjust the infant chamber air temperature set point:

1. Turn on the incubator using the Power Button (Figure 2 - 1, item 32).
2. After the Power-up Indicator Test is complete, press the Set Temperature Button (Figure 2 - 1, item 15).
3. Use the Set Temperature Up and Down Arrow Buttons (Figure 2 - 1, items 14 and 16) to adjust the temperature setting to the desired value. The temperature can be adjusted from 17.0° C to 38.9° C in 0.1° C increments.
4. When the desired value is set, either press the Set Temperature Button again or wait 5 seconds, after which time the Main Display Screen will return to displaying the measured infant chamber air temperature.

PULSE OXIMETER AND OXYGEN MONITOR CONTROL (OPTIONAL FEATURE)

The incubator is calibrated to display functional oxygen saturation (Figure 2 - 1, item 18), pulse rate (Figure 2 - 1, item 19) and oxygen concentration (Figure 2 - 1, item 20). In addition to these numerical displays, the pulse rate is also displayed on a pulse strength bar graph (Figure 2 - 1, item 22). The PulseOx SET button (Figure 2 - 1, item 24) and up and down arrows (Figure 2 - 1, item 25) can be used to turn the pulse oximeter and/or oxygen monitor on and off. These buttons can also be used to set high and low alarm limits for each variable. When these buttons are used to reach the oxygen sensor calibration mode, the Oxygen Sensor Cal. Indicator (Figure 2 - 1, item 21) will be illuminated. Refer to SECTION 3 and SECTION 4 for more information on using the pulse oximeter and oxygen monitor features of this incubator.

ALARMS / INDICATORS

The incubator utilizes a visual and audible alarm system. Audible alarms can be silenced for approximately one minute using the ***MUTE*** button (Figure 2 - 1, item 17). The audible alarm will sound at 65 dB at a distance of 3 m from the operator interface of the incubator.

WARNING: **If an alarm condition (other than the exceptions listed herein) occurs while the MUTE button is activated, only visual indicators will be activated.**

Standard System Alarms

Alarm	Priority
System Fail Alarm	LOW
Sensor Fail Alarm	LOW
Air Temperature Setpoint >37°C	LOW
Air Flow Alarm Indicator	LOW
High Temperature Indicator	LOW
AC Fail Indicator	LOW
Power Fail Indicator	LOW

SpO_2 Alarms (Optional Feature)

SpO_2 % HIGH	LOW
SpO_2 % LOW	MEDIUM
PULSE RATE HIGH	LOW
PULSE RATE LOW	LOW
O_2 % HIGH	MEDIUM
O_2 % LOW	MEDIUM
SpO_2 DATA PERIOD	LOW

Alarms are indicated by a continuous beep to alert operator to inspect the device to determine the cause of the alarm.

The SpO_2 % LOW, O_2 % HIGH, and O_2 % LOW alarms are indicated by a series of 3 beeps followed by a slight pause, and then repeated. This is to alert the operator to these specific alarms and their Medium Priority.

Power Alarms

When the incubator becomes disconnected from AC power, the AC Fail indicator (Figure 2 - 1, item 6) illuminates and an audible alarm will sound. When the incubator becomes disconnected from both AC and DC power and the internal battery voltage falls below 10.1 volts, the ***PWR FAIL*** indicator (Figure 2 - 1, item 7) illuminates and a continuous audible alarm sounds. Power to maintain the temperature in the infant chamber, and the accuracy of the O_2 and the SpO_2 monitors (if equipped), is no longer available and all power to the incubator (other than to power the ***PWR FAIL*** indicator and the audible alarm) is disabled. The indicator illuminates as long as the incubator remains on. Pressing the ***MUTE*** button will not silence the audible alarm. The Power Button should be pressed to turn the incubator off, silencing the audible alarm, and the incubator should be connected to AC power to allow the battery to recharge.

In units with the Optional SpO_2 feature, the Power Fail alarm is a Medium Priority Technical Alarm.

Temperature Alarms

When the measured air temperature is more than 1° C from the user-configured set point, an intermittent audible alarm will sound every minute and the Main Display Screen will flash ***HI*** or ***LO*** every 5 seconds until the incubator temperature is back to within 1° C of the set point.

When the measured air temperature exceeds 38.5° C, the ***HIGH TEMP*** alarm indicator (Figure 2 - 1, item 5) illuminates and an intermittent audible alarm turns on. The incubator is still fully operational and the operator, at his/her discretion, may ignore this alarm.

When the measured air temperature exceeds 39.0° C, the ***HIGH TEMP*** alarm indicator, the ***SYS FAIL*** alarm indicator (Figure 2 - 1, item 1), and a continuous audible alarm turn on. The incubator's heater is disabled and the incubator must cool to below 39° C before the heater is re-enabled.

When the measured air temperature exceeds 39.2° C, the ***SYS FAIL*** alarm indicator and a continuous audible alarm turn on. The incubator's heater is disabled until the infant chamber temperature is lowered, at which point the incubator must be turned off and then on again to reset the alarm.

The ***SENS FAIL*** indicator (Figure 2 - 1, item 2), coupled with a continuous audible alarm, indicates the temperature being sensed by the primary temperature sensor is well outside the normal temperature range of the incubator (10 - 45° C). The activation of this alarm may indicate a problem with the temperature sensor or the control circuitry, in which case, the incubator needs to be serviced by qualified personnel.

If the primary temperature sensor is shorted or indicates an extremely high temperature, the ***SENS FAIL***, ***HIGH TEMP***, and ***SYS FAIL*** indicators and alarms will all be activated and the incubator's heater will be disabled.

If the primary temperature sensor is open or indicates an extremely low temperature, the ***SENS FAIL*** and ***SYS FAIL*** alarms will be activated, and the heater will be disabled.

If the user specifies a chamber set point temperature greater than 37° C, the Air Temperature Setpoint > 37° C Indicator (Figure 2 - 1, item 3) will illuminate.

Pulse Oximeter and Oxygen Monitor Alarms (Optional Feature)

Below each of the pulse oximeter and oxygen monitor screens are two LEDs, labeled HI and LO. When any of the three displayed values (oxygen saturation, pulse rate, or oxygen concentration) exceed the user-programmed high alarm limit, the corresponding HI LED illuminates and an audible alarm will sound. When any of the three displayed values goes below the user-programmed low alarm limit, the corresponding LO LED illuminates and an audible alarm will sound.

When calibrating the oxygen monitor, if the low oxygen alarm limit is programmed below 21%, the Oxygen Setpoint Low Indicator (Figure 2 - 1, item 23) is illuminated.

Other Alarms

When the airflow through the infant chamber is reduced due to an obstruction, such as a blanket, the ***AIR FLO*** alarm indicator (Figure 2 - 1, item 4) illuminates and a continuous audible alarm turns on. Due to reduced airflow, the incubator's heater's temperature will exceed a preset threshold and will be disabled. After the airflow obstruction is removed and the heating element is allowed to cool, the heater system will return to normal operation.

NOTE: *A blanket should always be used inside the infant chamber between the infant and the mattress.*

When the battery voltage drops below 11 volts, the ***LOW BAT*** indicator (Figure 2 - 1, item 27) illuminates and an intermittent audible alarm turns on. The battery will be able to supply the heater requirements for only a few minutes after this alarm occurs. The ***LOW BAT*** alarm cannot be reset. The incubator must be connected to AC power to allow the battery to recharge when this alarm occurs.

NOTE: *When this alarm activates, the incubator has approximately fifteen (15) minutes of operational power remaining. This estimate is for a good battery and an ambient temperature of 20° C.*

EXTERNAL LIGHTING

The incubator is equipped with an external examination light. This light can be activated only when the incubator is turned on.

The light is intended to be used as an external light source. Do not place the light into the inner infant chamber.

WARNING: **Do not change the lamp and touch the patient simultaneously.**

WARNING: **EXPLOSION HAZARD: Do not use the examination light, the pulse oximeter, or oxygen monitor in the presence of flammable anesthetics or other flammable gases.**

WARNING: **Avoid eye exposure. Direct light exposure may cause eye damage. Infants must wear eye protection.**

SKIN TEMPERATURE PROBE

The Measurement Specialties 409B Reusable Skin Temperature Probe is to be used to monitor the surface temperature of the infant. Select appropriate site for monitoring according to currently accepted medical practices.

WARNING: **The skin temperature sensor is not a rectal probe. The skin temperature sensor is not to be used as a rectal probe.**

SECTION 3: PULSE OXIMETRY (OPTIONAL FEATURE)

This section contains information regarding the pulse oximetry feature of the incubator. Principles of operation, set-up instructions, and sensor options are detailed.

PULSE OXIMETER PRINCIPLES OF OPERATION

Pulse oximetry is based on several key principles:

- the absorption of red and infrared light (spectrophotometry) by oxyhemoglobin and deoxyhemoglobin
- the change in volume of arterial blood in tissue (and hence, light absorption by blood) due to changes in pulse (plethysmography)
- the fluctuating absorbance of venous blood during arteriovenous shunting contributes to noise during the pulse

Because oxyhemoglobin and deoxyhemoglobin differ in light absorption, the amount of red and infrared light absorbed by the blood is related to hemoglobin oxygen saturation. The pulse oximeters supported by the incubator, Masimo SET® and Nellcor OxiMax, decompose the red and infrared pulsatile absorbance signals into an arterial signal plus a noise component and calculate the ratio of arterial signals. The ratio of the two arterial pulse-added absorbance signals is used to find the oxygen saturation in an empirically derived equation in the pulse oximeter software.

Different pulse oximetry sensors can be used with the system. The user should consult the sensor's instructions for use to ensure the appropriate sensor is being used. In addition, only Masimo sensors should be used with the Masimo pulse oximeter and only Nellcor sensors should be used with the Nellcor pulse oximeter. Sensor accuracy data, found in SECTION 7 (PULSE OXIMETER SPECIFICATIONS (OPTIONAL FEATURE)), are based on human blood studies in which the values obtained for healthy adult volunteers in induced hypoxia states during motion and non-motion conditions were compared to a laboratory co-oximeter.

Erroneous SpO_2 readings may be caused by several reasons including, but not limited to, the following:

- Interfering substances such as Carboxyhemoglobin and Methemoglobin (i.e. an increase in SpO_2 approximately equal to the amount of carboxyhemoglobin present)
- Dyes, or any substance containing dyes, that change usual blood pigmentation

- Severe anemia
- Excessive patient movement
- Venous pulsations
- Placement of a sensor on an extremity with a blood pressure cuff, arterial catheter, or intravascular line
- Use during defibrillation (temporary)

WARNING: **Do not use the pulse oximeter or oximetry sensors during magnetic resonance imaging (MRI) scanning. Induced current could potentially cause burns. The pulse oximeter may affect the MRI image and the MRI unit may affect the accuracy of the oximetry results.**

WARNING: **The pulse oximeter should NOT be used as an apnea monitor.**

NOTE: *The pulse oximeter should be considered an early warning device. As a trend towards patient hypoxemia is indicated, blood samples should be analyzed by a laboratory co-oximeter to completely understand the patient's condition.*

Pulse rate measurement is based on the optical detection of a peripheral flow pulse and therefore may not detect arrhythmias. The pulse oximeter should not be used as a replacement or substitute for ECG-based arrhythmia analysis.

NOTE: *Loss of pulse signal can occur for many reasons including, but not limited to, when the patient has hypotension, severe vasoconstriction, severe anemia, or hypothermia; there is arterial occlusion proximal to the sensor; or the patient is in cardiac arrest or is in shock.*

SECTION 3: PULSE OXIMETRY (OPTIONAL FEATURE)

PULSE OXIMETER SET-UP INSTRUCTIONS

The following steps will instruct the user how to initially set up the pulse oximeter and program low and high alarm settings for SpO_2 and pulse rate. Additionally, when using the Masimo pulse oximeter, the user can also set the algorithm mode, set the averaging mode, and view the oxygen perfusion index.

CAUTION: Check alarm limits each time the system is used to ensure that they are appropriate for the patient being monitored.

INITIAL SET-UP

1. Turn the incubator power on using the Power Button (Figure 2 - 1, item 32).
2. Connect the pulse oximeter cable to the connector on the side of the incubator (Figure 2 - 2, item 2). Connect pulse oximeter sensor to the cable and to a suitable site on the patient being monitored.
3. To turn on the pulse oximeter displays, press the SET button (Figure 2 - 1, item 24) one time and then either the up or down arrow button (Figure 2 - 1, item 25) until the %SPO2 screen displays “On”. If the screen shows “---”, there is no value available.
4. When the pulse oximeter is disabled, the %SPO2 and PULSE screens will display “OFF”. All alarms related to the pulse oximeter will also be disabled.

SETTING HIGH AND LOW %SpO_2 ALARMS

NOTE: *The pulse oximeter display will convert back to Normal Operation Mode after 5 seconds if no buttons are pressed.*

1. Press the SET button (Figure 2 - 1, item 24) three times (or until the %SPO2 HI LED illuminates) to set the high SpO_2 alarm.
2. Use the up or down arrow buttons (Figure 2 - 1, item 25) to set the high alarm to the desired setting.
   a. Must be at least 1% higher than the SpO_2 low alarm setting.
   b. Can be set from 85 - 100%.
3. Press the SET button four times (or until the %SPO2 LO LED illuminates) to set the low SpO_2 alarm.
4. Use the up or down arrow buttons to set the low alarm to the desired setting.
   a. Must be at least 1% lower than the SpO_2 high alarm setting.
   b. Can be set from 0 - 84%.

SETTING HIGH AND LOW PULSE RATE ALARMS

NOTE: *The pulse oximeter display will convert back to Normal Operation Mode after 5 seconds if no buttons are pressed.*

1. Press the SET button (Figure 2 - 1, item 24) five times (or until the PULSE HI LED illuminates) to set the high Pulse alarm.
2. Use the up or down arrow buttons (Figure 2 - 1, item 25) to set the high alarm to the desired setting.
   a. Must be at least 1 bpm higher than the Pulse low alarm setting.
   b. Can be set from 85 - 241 bpm.
3. Press the SET button six times (or until the PULSE LO LED illuminates) to set the low Pulse alarm.
4. Use the up or down arrow buttons to set the low alarm to the desired setting.
   a. Must be at least 1 bpm lower than the Pulse high alarm setting.
   b. Can be set from 25 - 84 bpm.

SETTING THE ALGORITHM MODE (MASIMO ONLY)

NOTE: *The pulse oximeter display will convert back to Normal Operation Mode after 5 seconds if no buttons are pressed.*

Different algorithm modes can be used depending on the importance of SpO_2 sensitivity vs. probe-off detection. The system will power up in A1 Normal Mode as a default. When setting the Algorithm Mode, the setting will be displayed on the %SPO2 screen.

1. Press the SET button (Figure 2 - 1, item 24) 10 times (or until HI and LO %SPO2 LEDs are both illuminated) to set the Algorithm Mode.
2. Use the up or down arrow buttons (Figure 2 - 1, item 25) to choose one of the following modes:
   a. A1 = Normal Mode
      i. Provides the best combination of sensitivity and probe-off detection performance.
      ii. This mode is recommended for the majority of patients.

b. A2 = Maximum Mode

i. Interprets and displays data for very weak signals.

ii. This mode is recommended for the sickest patients or during procedures when clinician and patient contact is continuous.

c. A3 = APOD Mode

i. Least sensitive in picking up a reading on patients with low perfusion but provides the best detection for probe-off conditions.

ii. This mode is recommended for use on patients that are at particular risk of the sensor becoming detached (e.g. pediatric, combative, etc.)

SETTING THE AVERAGING MODE (MASIMO ONLY)

NOTE: *The pulse oximeter display will convert back to Normal Operation Mode after 5 seconds if no buttons are pressed.*

The Averaging Mode is used to determine how many values will be used to calculate the SpO_2 and pulse rate readings. A lower averaging rate uses fewer values to calculate the readings, resulting in more unstable readings, but will more quickly alert the user to potentially alarming patient conditions. The system will power up with C2 Middle Averaging Rate as a default. When setting the Averaging Mode, the setting will be displayed on the %SPO2 screen.

1. Press the SET button (Figure 2 - 1, item 24) 11 times (or until the HI and LO PULSE LEDs are both illuminated) to set the Averaging Mode.

2. Use the up or down arrow buttons (Figure 2 - 1, item 25) to choose one of the following averaging rates:

a. C1 = Low Averaging Rate

i. SpO_2 averaging rate is set to 2 - 4 seconds.

b. C2 = Middle Averaging Rate

i. SpO_2 averaging rate is set to 8 seconds.

c. C3 = High Averaging Rate

i. SpO_2 averaging rate is set to 16 seconds.

SETTING THE PERFUSION INDEX (MASIMO ONLY)

The Perfusion Index value represents a ratio between the pulse signal and noise. It helps clinicians determine if the pulse oximetry sensor is placed on an optimal monitoring site. The Perfusion Index value has a range of 0.0 - 20.0 (i.e. the higher the value, the better the perfusion).

1. Press and hold the down arrow button (Figure 2 - 1, item 25).
2. The perfusion index will be displayed on the %SPO2 screen. A display of "---" indicates no value is available.
3. Release the down arrow button to switch back to Normal Operation Mode.

NOTE: *Calibration and resetting the pulse oximeter algorithm or averaging mode may cause a slight delay in readings.*

NOTE: *Setting alarm set points, calibration, and resetting pulse oximeter algorithm or averaging methods will disable a portion of the pulse oximetry or oxygen monitoring displays (Masimo only).*

OPERATIONAL ALARMS AND WARNINGS

When the measured oxygen saturation or pulse rate falls out of the user-selected range, either "HI" or "LO" will flash on the appropriate screen approximately every 2 to 3 seconds. An audible alarm will also be heard every 3 seconds. Pressing the ***MUTE*** button will silence the audible alarm for approximately 1 minute.

Update Period Exceeded

The PulseOx system updates the data being displayed on the display screens every second. After a period of 5 seconds, if the system has not received an update, the screen will flash "PS". If an update still is unavailable after 15 seconds, "PS" will continue to flash and an audible alarm will sound until the condition is corrected.

Low Perfusion (Masimo Only)

The system displays "LP" when there are very low amplitude arterial pulsations. It has been suggested that at extremely low perfusion levels, pulse oximeters can measure peripheral saturation, which may differ from central arterial saturation[1]. This "localized hypoxemia" may result from the metabolic demands of other tissues extracting oxygen proximal to the monitoring site under conditions of sustained peripheral hypoperfusion. (This may occur even with a pulse rate that correlates with the ECG heart rate.)

NOTE: *If the low perfusion message is frequently displayed, find a better-perfused monitoring site. In the interim, assess the patient and, if indicated, verify oxygenation status through other means.*

Low Signal IQ (Masimo Only)

When the signal quality is very low, the accuracy of the SpO_2 measurement may be compromised, and the system displays "LS" on the PULSE Display Screen. When the "LS" message appears, proceed with caution and do the following:

- Assess the patient.
- Check the sensor and ensure proper sensor application. The sensor must be well secured to the site to maintain accurate readings. Also, misalignment of the sensor's emitter and detector can result in smaller signals.
- Determine if an extreme change in the patient's physiology and blood flow at the monitoring site occurred (e.g., an inflated blood pressure cuff, a squeezing motion, sampling of an arterial blood specimen from the hand containing the pulse oximetry sensor, severe hypotension, peripheral vasoconstriction in response to hypothermia, medications, or a spell of Raynaud's syndrome).
- With neonates or infants, check that the peripheral blood flow to the sensor site is not interrupted. Interruption, for example, may occur while lifting or crossing their legs during a diaper change.

[1] Severinghaus JW, Spellman MJ. Pulse Oximeter Failure Thresholds in Hypotension and Vasoconstriction. Anesthesiology 1990; 73:532-537

SECTION 3: PULSE OXIMETRY (OPTIONAL FEATURE)

TEST OF OPERATIONAL ALARMS

To ensure the pulse oximeter is generating the proper alarm indications, the following instructions should be followed:

1. After the sensor is attached to the patient, verify the patient alarms are functional by setting the SpO_2 and pulse rate high and low alarm limits beyond the patient readings.
   a. An audible alarm should sound.
   b. A “HI” or “LO” visual indicator should flash on the appropriate display screen.
2. Verify the sensor alarms are functional.
   a. Remove the sensor from the patient.
      i. An audible alarm should sound.
      ii. Error code “E6” should flash on the $\%SpO_2$ display screen.
   b. Disconnect the sensor from the incubator.
      i. An audible alarm should sound.
      ii. Error code “E9” should flash on the $\%SpO_2$ display screen.

PULSE OXIMETRY SENSORS

The incubator has been validated to be used with Masimo LNCS sensors and Nellcor OxiMax sensors. Refer to SECTION 9, PARTS AND ACCESSORIES, for vendor contact information to request sensor technical data. Before using any sensor, carefully read the sensor’s instructions for use. When selecting a sensor, consider the patient’s weight, the adequacy of perfusion, the available sensor sites, and duration of monitoring.

WARNING: **If using pulse oximetry during full body irradiation, keep the sensor out of the irradiation field. If the sensor is exposed to irradiation, the reading might be inaccurate or the unit might read zero for the duration of the active irradiation period.**

CAUTION: Oxygen sensor and pulse oximetry cables must be contained within cart or otherwise secured when not in use.

SECTION 3: PULSE OXIMETRY (OPTIONAL FEATURE)

CAUTION: Pulse oximeter probes and cables are designed for use with specific monitors. Only use Masimo sensors and patient cables for Masimo pulse oximetry model. Only use Nellcor sensors and patient cables for Nellcor pulse oximetry model. Verify the compatibility of the monitor, sensor, and cable before use, otherwise patient injury can result.

Tissue damage can be caused by incorrect application or use of a pulse oximetry sensor, for example, by wrapping the sensor too tightly. Inspect the sensor site as directed in the sensor instructions for use to ensure skin integrity and correct positioning and adhesion of the sensor.

High ambient light sources such as surgical lights (especially those with a xenon light source), bilirubin lamps, fluorescent lights, infrared heating lamps, and direct sunlight can interfere with the performance of a SpO_2 sensor. To prevent interference from ambient light, ensure that the sensor is properly applied and that the sensor site is covered with opaque material if necessary. Failure to take this precaution in high ambient light conditions may result in inaccurate measurements.

CAUTION: If a sensor or cable is damaged in any way discontinue use immediately.

PULSE OXIMETRY TESTERS / SIMULATORS

To verify the functionality of the pulse oximeter sensors and cables, some commercially available functional testers may be used (refer to the testing device's instructions for use to determine compatibility). The functional testers are designed to interface with the pulse oximeter's expected calibration curves and measure the total error of the pulse oximetry system. However, due to the complex interaction between the pulse oximeter sensor and patient, these testers cannot be used to assess the accuracy of the pulse oximeter sensors. Refer to SECTION 7, SPECIFICATIONS, to review sensor accuracy information or contact the pulse oximeter vendor listed in SECTION 9, PARTS AND ACCESSORIES.

SECTION 4: OXYGEN MONITOR (OPTIONAL FEATURE)

OXYGEN MONITOR PRINCIPLES OF OPERATION

The oxygen monitor is intended to be used to measure and display the oxygen concentration as a volume fraction percentage (%) in an area to which a Maxtec MAX-250E oxygen sensor is exposed. The readings are proportional to the partial pressure of oxygen (PO_2), which is equal to the percentage of oxygen times the absolute pressure of the environment being measured. The oxygen monitor can be influenced by the following:

Temperature

In order for oxygen readings to be accurate, the oxygen monitor must be thermally stable when calibrated and when measurements are taken. If temperature conditions change, adequate time must be allowed for the sensor to stabilize and give accurate readings. For best results, calibrate the oxygen monitor at the same temperature at which the monitor will be used.

Pressure

The readings from the oxygen monitor are proportional to the oxygen concentration only if pressure is held constant. The oxygen monitor does not compensate for changes in barometric pressure. Because the flow rate of the gas being sampled can affect the pressure at the sensor in that the back pressure may change, the oxygen monitor should be calibrated at the same pressure as the sample gas. Changes in elevation result in calibration error of approximately 1% of reading per 250 feet. In general, calibration of the instrument should be performed when the geographic elevation at which the product is being used changes by more than 500 feet. The oxygen monitor should not be calibrated at a pressure above 2 atmospheres as this is beyond the sensor's intended use.

Humidity

Condensation due to high humidity can adversely affect the oxygen monitor. The sensor should be calibrated and used in environments < 95% relative humidity and placed upstream of any humidifier (if used in a breathing circuit) to reduce the risk of water condensation.

CAUTION: Only use International Biomedical cable and Maxtec sensor for oxygen monitoring.

CAUTION: Use the oxygen monitor when oxygen is delivered to the infant.

OXYGEN MONITOR SET-UP INSTRUCTIONS

The following steps will instruct the user how to initially set up the oxygen monitor, program low and high alarm settings, and how to calibrate the oxygen sensor.

CAUTION: Check alarm limits each time the system is used to ensure that they are appropriate for the patient being monitored.

INITIAL SET-UP

1. Turn the incubator power on using the Power Button (Figure 2 - 1, item 32).
2. Connect the oxygen sensor cable to the connector on the side of the incubator (Figure 2 - 2, item 1).
3. Connect the oxygen sensor to the cable and place in area to be monitored.
   a. Place the oxygen sensor inside the infant chamber to monitor ambient oxygen concentration within the chamber.
   b. Connect the oxygen sensor to a 15 mm adapter on a patient breathing circuit to use in conjunction with a ventilator.
4. To turn on the Oxygen display, press the SET button (Figure 2 - 1, item 24) two times and then either the up or down arrow buttons (Figure 2 - 1, item 25) until the OXYGEN screen displays “On”. If the screen shows “---”, there is no value available.
5. When the Oxygen Monitor is disabled, the OXYGEN screen will display “OFF”. All alarms related to the Oxygen Monitor will also be disabled.

SETTING HIGH AND LOW OXYGEN ALARMS

NOTE: *The Oxygen Monitor display will convert back to Normal Operation Mode after 5 seconds if no buttons are pressed.*

1. Press the SET button (Figure 2 - 1, item 24) seven times (or until the OXYGEN HI LED illuminates) to set the high oxygen alarm.
2. Use the up or down arrow buttons (Figure 2 - 1, item 25) to set the high alarm to the desired setting.
   a. Must be at least 1% higher than the low oxygen alarm setting.
   b. Can be set from 31 - 100%.

3. Press the SET button eight times (or until the OXYGEN LO LED illuminates) to set the low Oxygen alarm.

4. Use the up or down arrow buttons to set the low alarm to the desired setting.

   a. Must be at least 1% lower than the high oxygen alarm setting.

   b. Can be set from 18 - 30%.

5. If the low oxygen alarm is set below 21.0%, the yellow “<21%” warning LED (Figure 2 - 1, item 23) will be illuminated.

OXYGEN MONITOR CALIBRATION

NOTE: *The Oxygen Monitor display will convert back to Normal Operation Mode after 5 seconds if no buttons are pressed.*

1. Press the SET button (Figure 2 - 1, item 24) nine times (or until the CAL LED illuminates, Figure 2 - 1, item 21) to calibrate the oxygen monitor.

2. Use the up or down arrow buttons (Figure 2 - 1, item 25) to change the oxygen percentage to the concentration of oxygen the sensor is exposed to during the calibration (use 20.9% if exposed to room air). Expose the sensor to the calibration gas for several minutes to ensure the sensor reading has stabilized.

   a. Can be set from 15.0 - 100%.

      NOTE: *If using a calibration gas other than room air, procure and dispose of gas according to hospital policy.*

3. Once the calibration setting is set to the desired level, press both the up and down arrow buttons simultaneously. “CAL” will be displayed on the OXYGEN screen to confirm that calibration is complete.

   NOTE: *Calibrate the oxygen sensor daily when in use or if environmental conditions change significantly (i.e. Temperature, Humidity, or Barometric Pressure).*

For oxygen readings to be accurate, the oxygen monitor must be thermally stable when calibrated and when measurements are taken. Calibration should also be done at the same pressure as when in use due to the fact that the flow rate of sample gas can change the back pressure at the sensing point, changing the oxygen reading. Never calibrate at a pressure above 2 atmospheres as this is beyond the sensor's intended use. The sensor should be calibrated and used in environments < 95% relative humidity and placed upstream of any humidifier to reduce the risk of water condensation which can affect the oxygen sensor.

CAUTION: Dropping or severely jarring the oxygen sensor after calibration may shift the calibration point enough to require recalibration.

OPERATIONAL ALARMS AND WARNINGS

When the measured oxygen concentration falls out of the user-selected range, either "HI" or "LO" will flash on the OXYGEN screen approximately every 3 seconds. An audible alarm will also be heard every 3 seconds. Pressing the ***MUTE*** button will silence the audible alarm for approximately one minute.

TEST OF OPERATIONAL ALARMS

To ensure the oxygen monitor is generating the proper alarm indications, the following instructions should be followed:

1. After the oxygen sensor is placed in the area to be monitored, verify the out-of-range alarms are functional by setting the oxygen high and low alarm limits beyond the oxygen readings of the area.
   a. An audible alarm should sound.
   b. A "HI" or "LO" visual indicator should flash on the OXYGEN display screen.
2. Verify the sensor alarm is functional by disconnecting the oxygen sensor from the cable attached to the incubator.
   a. An audible alarm should sound.
   b. Error code "E7" should flash on the OXYGEN display screen.

SECTION 4: OXYGEN MONITOR (OPTIONAL FEATURE)

OXYGEN SENSOR

The Maxtec MAX-250E oxygen sensor is similar in operation as a conventional galvanic cell (lead anode / KOH electrolyte) oxygen sensor. However, the chemistry of the MAX-250E sensor is unique. By implementing a weak acid electrolyte, MAX-250 sensors offer superior performance over the conventional oxygen sensor. The weak acid electrolyte is unaffected by CO_2, CO, and NO_x. This results in a sensor with a superior technical advantage over KOH-type sensors in applications where these gases are present.

Use only Maxtec Max-250E oxygen sensors and International Biomedical supplied cables with the incubator. Max-250E oxygen sensors offer quick response, stability, and life greater than 9000 hours.

CAUTION: The Maxtec MAX-250E oxygen sensor is a sealed device containing a mild acid electrolyte, lead (Pb), and lead acetate. Lead and lead acetate are hazardous waste constituents and should be disposed of properly, or returned to Maxtec or International Biomedical for proper disposal or recovery.

CAUTION: Oxygen sensor and pulse oximetry cables must be contained within cart or otherwise secured when not in use.

CAUTION: Only use International Biomedical cable and Maxtec sensor for oxygen monitoring.

SECTION 5: PREVENTATIVE MAINTENANCE

To ensure proper operation, standby readiness, and malfunction reporting, International Biomedical recommends following a preventative maintenance program. The daily preventative maintenance procedures can be performed by a knowledgeable incubator transport person. Monthly maintenance procedures (detailed in the Service Manual) should be performed by an appropriately trained biomedical maintenance person. No other preventative maintenance is required.

NOTE: *Perform preventative maintenance procedures on all Accessory Equipment as recommended in the manual for each piece of equipment.*

DAILY MAINTENANCE

The following maintenance procedures should be performed on a daily basis by a knowledgeable incubator transport person.

OPERATIONAL CHECK

1. Check the AC power cord and ensure that there are no cuts or severe bends in the cord, that all three prongs on the plug are in good condition, and that the cord is securely fastened in place. Replace the cord as needed.
2. Ensure the incubator is plugged in to an appropriate AC power source. Verify the ***BAT CHG*** indicator (Figure 2 - 1, item 28) on the front panel is illuminated and that all other indicators are off when the incubator power is off.
3. With the incubator connected to AC power, press the power button (Figure 2 - 1, item 32) to turn the incubator on. The incubator will perform a test of all indicators, LEDs, and the audible alarm. Ensure all the indicators and LEDs illuminate, and that the audible alarm can be heard. Verify the ***AC OP*** indicator (Figure 2 - 1, item 29) remains illuminated after completion of the test.
4. Place a hand inside the right side of the infant chamber and verify air flow. The fan should be able to be heard at the left side of the incubator.
5. A few minutes after turning the incubator on, the air temperature inside the infant chamber should begin to increase and will be displayed on the Main Display Screen. Verify.
6. Turn on the external light and ensure it operates under AC power. Turn off the light.

7. Disconnect the AC power connection from the incubator and observe that the ***BAT OP*** indicator (Figure 2 - 1, item 31) is illuminated and that the Main Display Screen still displays the infant chamber air temperature.

8. Turn on the external light and ensure it operates under Battery power. Turn off the light.

9. Turn off the incubator.

10. If external 12 volt DC power is to be used, check the 12 volt DC power cord and ensure that it has no cuts or severe bends and that the connectors have not been damaged.

11. Connect the incubator to a DC power source. Turn on the incubator and verify the ***DC OP*** indicator (Figure 2 - 1, item 30) is illuminated and that the Main Display Screen still displays the infant chamber air temperature.

12 Turn on the external light and ensure it operates under DC power. Turn off the light.

13. Disconnect the DC power connection and reconnect AC power to the incubator and turn the incubator off.

    CAUTION: DO NOT leave the 12 volt cord attached to the DC connector of the incubator when not operating in DC power mode.

14. Inspect the mattress and positioning straps for damage. Repair or replace as needed.

    WARNING: **The transport incubator is Type B equipment and the baby may not be electrically isolated from earth. Care must be taken that additional equipment connected to the baby is electrically safe. To ensure patient electrical isolation, connect only to other equipment with electronically isolated circuits.**

AIR / OXYGEN SYSTEM

1. If gas tanks are included in the incubator assembly, ensure they are properly secured.

2. With the air and oxygen tank regulators connected to appropriate external devices, open the valves on the air and oxygen tanks and ensure that each tank is fully pressurized and ready for use.

3. Ensure that none of the hoses connecting the tanks to external devices are leaking or kinked.

INFANT CHAMBER CHECK

CAUTION: Do not move the incubator by pushing on the infant chamber. The infant chamber is not designed to sustain the forces to push the incubator. Stress fractures in the infant chamber can occur.

1. Ensure that the infant chamber is free from cracks.
2. Ensure that the gasket between the chambers and airflow tray is in place. Check that the grommets in the tubing through-holes on the infant chamber are also in place.
3. Ensure that the infant chamber is secured to the incubator with the two latches on both ends of the infant chamber.

   CAUTION: Do not overtighten the infant chamber screws. Do not strip the aluminum into which these screws are threaded.

4. Ensure that the infant chamber is clean and ready for transport, as determined by the transport team leader.

   WARNING: **This incubator was calibrated with the infant chamber originally supplied. If this chamber is exchanged for an infant chamber of a different configuration or size, the temperature calibration will be affected. Consult International Biomedical before returning the incubator to service.**

CART AND ACCESSORIES

1. Inspect the casters for wear or damage. Inspect for worn or damaged rubber and tightness of retaining nuts. Replace damaged casters immediately.
2. Ensure the incubator is securely fastened to the cart.
3. Test operation of other accessories as indicated by manufacturer's recommendations.

   CAUTION: When the incubator is attached to a rigid cart with an internal power strip, the power cord must be contained within cart or secured on the end of cart with cord holders when not in use.

SENSORS AND CABLES (OPTIONAL EQUIPMENT)

1. Inspect the oxygen sensor and the pulse oximeter sensor for damage. Replace, if necessary.
2. Inspect the oxygen sensor cable and pulse oximeter cable for wear or damage. Replace, if necessary.

CLEANING OF INCUBATOR AND CHAMBER

WARNING: **The incubator should be turned off and AC or DC power disconnected when cleaning.**

CAUTION: CLEANING AND CARE: Do not autoclave, pressure sterilize, or gas sterilize the incubator, cables, or sensors. Use cleaning solutions sparingly as excessive solution can flow into the incubator and cause damage to internal components. Do not soak or immerse the incubator or sensors in any liquid. Do not use petroleum-based, alcohol, acetone, or other harsh solvents. See cleaning instructions of reusable sensors and cables in directions for their use.

Wash the chamber, infant mattress, and top surface of the airflow tray with mild soap or detergent and water solution.

CAUTION: Do not drip cleaning solution through the holes where the swell latches fit into the air flow assembly.

Household ammonia diluted in water in the concentrations recommended for hospital cleaning may also be used. These solutions may be applied with a soft absorbent cloth, followed by rinsing with clean water. Wipe away residue with soft chamois or cellulose sponge material.

CAUTION: The infant tray grounding tabs are sharp; use care when cleaning the air flow system.

CLEANING OF CABLES (OPTIONAL EQUIPMENT)

Clean the oxygen sensor cable and the pulse oximeter patient cable by wiping with a 70% isopropyl alcohol pad (or equivalent) and allow the cables to dry before reusing.

CLEANING OF PULSE OXIMETRY SENSOR (OPTIONAL EQUIPMENT)

The provided sensors are disposable and should only be reused on the same patient if the adhesive still adheres to the skin and the detector window is clear. Otherwise, properly dispose of the sensor (see SECTION 5, PRODUCT DISPOSAL / RECYCLING, for disposal methods). For reusable sensors, see the manufacturer's cleaning instructions.

CLEANING OF OXYGEN SENSOR (OPTIONAL EQUIPMENT)

When cleaning or disinfecting the oxygen sensor, take appropriate care to prevent any solution from entering the sensor end or the connector end. The oxygen sensor may be cleaned using a mild detergent and moist cloth and disinfected using standard topical disinfectants.

MONTHLY MAINTENANCE

Monthly maintenance should be performed by a biomedical maintenance person, or trained designee. Refer to the Service Manual for suggested monthly maintenance procedures.

BATTERY CARE

The incubator contains a sealed lead battery (P/N 888-0071). If the incubator is not to be used for an extended period of time, disconnect and remove the battery. After use or complete discharge, immediately recharge the battery. If not regularly used or maintained on charge, the battery should be recharged on a monthly basis to prevent battery degradation. The battery is warranted for a period of ninety days. The life of the battery is dependent on the number and depth of discharge cycles. At the end of the battery's life, it must be recycled or disposed of properly.

CAUTION: The incubator MUST be plugged into AC power and the battery recharged after any battery usage. The battery will sustain damage if drained of power and not recharged.

Accessory equipment may also contain batteries which must be properly cared for. Consult the accessory equipment user's manuals for instructions.

PRODUCT DISPOSAL / RECYCLING

The incubator should be returned to International Biomedical for recycling when it reaches the end of its life (7 to 10 years). The incubator's battery can be taken to any battery recycling facility when it reaches the end of its life (approximately 200 discharge cycles, dependent on depth of discharge).

The pulse oximetry sensors are single-use sensors and should be disposed of in a manner consistent with local laws.

GENERAL TROUBLESHOOTING

The following list describes the most common issues that arise through use of the incubator and the suggested corrective actions. If further assistance is needed, refer to the Service Manual or contact International Biomedical.

WARNING: **OBSERVE BEST PRACTICE: The instructions in this manual in no way supersede established medical procedures or staff preference concerning patient care.**

Why is the AC fail alarm sounding when the unit is unplugged?

This is normal. The alarm indicates that the unit is no longer connected to AC power. Press the ***MUTE*** button to clear it.

Why is the Air Flow alarm sounding?

When a certain air flow rate is not met, the alarm sounds. Check for an obstruction, such as a blanket, in the airflow pathway. Check the chamber for cracks, missing grommets, or missing gaskets. Verify that the fan impeller is spinning. Verify that all swell latches are present and tightly secured.

Why don't the buttons do anything when I press them?

Ensure the incubator is turned on. If problem still persists, the membrane panel has been damaged and the overlay needs to be replaced. Contact International Biomedical for assistance.

Why won't the light turn on?

Ensure the incubator is turned on; the light gets its power from the incubator and will not work unless the incubator is on. If the light still doesn't work with the incubator on, it needs to be replaced (e.g. the bulb may be bad, there may be a short in the circuitry). Contact International Biomedical for assistance.

MAIN DISPLAY ERROR CODES

Table 6 - 1 shows the failure codes that may be seen on the Main Display Screen. If further assistance is needed, refer to the Service Manual or contact International Biomedical.

Table 6 - 1 Main Display Screen Failure Codes

Error Code	Failure	Corrective Action
E01	Set Point Output Voltage Error	The display board needs to be replaced. Contact International Biomedical for assistance.
E02	Temperature Out of Range: baby temp. probe is disconnected, damaged, or out of sensor's useable range	Reconnect temperature probe to incubator. If error persists, replace temperature probe.
E03	Battery Voltage Out of Range: battery is drained or overcharged	Charge battery by plugging into AC power for a minimum of 8 hours. If problem persists, battery must be replaced.
E04	Display Range Limit Exceeded: value to be shown is outside of the display's limits	Verify temperature using secondary method. If temperature seems reasonable, the temperature sensor is faulty and must be replaced. Contact International Biomedical for assistance
E07	EEPROM Write Failure: temperature set point not saved	Turn the incubator off and then on again. Repeat temperature set procedure. If error still occurs, the display board must be serviced. Contact International Biomedical for assistance.
E08	EEPROM Value Out of Range: temperature set point out of range	
E09	EEPROM Corrupt	

PULSE OXIMETER AND OXYGEN MONITOR FAILURE CODES (OPTIONAL FEATURE)

Table 6 - 2 shows the failure codes that may be seen when using the Masimo Pulse Oximeter. Failure codes will be displayed in the %SPO2, PULSE, or OXYGEN display screens, as designated in the table. In some cases, a power down may reset the error; however, the pulse oximeter and/or oxygen monitor should be used with extreme caution. If further assistance is needed, refer to the Service Manual or contact International Biomedical.

Table 6 - 2 Masimo Pulse Oximetry and Oxygen Monitoring Failure Codes

%SPO2 Display	PULSE Display	OXYGEN Display	Failure	Corrective Action
-	PS (flashing)	-	Pulse Search	Ensure proper sensor application. Reposition sensor, if necessary.
-	LP (flashing)	-	Low Perfusion	Move sensor to better perfused site.
-	LS (flashing)	-	Low Signal IQ	Ensure proper sensor application. Move sensor to a better perfused site.
-	-	E1	O_2 Cal. Data Lost	Recalibrate the oxygen sensor per SECTION 5.
-	-	E7	Oxygen Value Out of Range	Confirm sensor cable is attached. Recalibrate oxygen sensor. If error persists, replace cable.
E2	E2	-	Alarm Setpoint Data Lost	Set the alarm limits per SECTION 4 and/or SECTION 5.
E4	-	-	Too Much Light	Remove or reduce lighting. Cover sensor from light. Reposition sensor.
E5	-	-	Signal Interference	Remove outside interference.
E6	-	-	Sensor Off Patient	Reattach sensor to patient.
E7	multiple	-	Bad Sensor	Replace sensor. Refer to the instructions for the sensor being used.
E8	-	-		
E9	-	-	No Sensor Connected (or the signal has been lost for more than 4 seconds)	Confirm a sensor is attached to the incubator and the patient being monitored.
E10	-	-	Display board failure	Do not continue to use incubator. Send unit to service department for repair. Refer to Service Manual or contact International Biomedical for more information.
E32	-	-		
E33	-	-		
E34	-	-		
E35	-	-		
E36	-	-		
E37	-	-		
E38	-	-		
E39	-	-		
E40	-	-		
E63	multiple	-		

Table 6 - 3 and Table 6 - 4 show the failure codes that may be seen when using the Nellcor Pulse Oximeter. In Table 6 - 3, the error code listed will be displayed on the PULSE display screen. Additional error codes may be displayed on the %SPO2 display screen, but are unnecessary to describe here (see the Service Manual for more details). If further assistance is needed, refer to the Service Manual or contact International Biomedical.

Table 6 - 3 Nellcor Pulse Oximetry Board and Software Failure Codes

PULSE Display	Error Description	Corrective Action
1 or 2	Malfunction (typically, a failed hardware test)	Cycle the PulseOx system off and then on again. If error persists, the PulseOx system is damaged and needs to be replaced.
4	Software Error	Wait for 15 seconds to see if the software resets itself. If no signal is received after 15 seconds, the PulseOx system needs to be serviced. Contact International Biomedical.
5	Communications Error	Wait for 15 seconds to see if communications reset. If no signal is received, the PulseOx system needs to be serviced. Contact International Biomedical.
6	Defective Sensor Detected	Ensure the sensor is properly connected. Disconnect and reconnect the sensor. If the error occurs again, replace the sensor and/or cable. If the error persists, the PulseOx system needs to be serviced. Contact International Biomedical.

Table 6 - 4 Nellcor Pulse Oximetry Sensor Failure Codes

Sensor Status	%SPO2 Display	PULSE Display	Corrective Action
Sensor Disconnected	E9	1	Ensure sensor is connected to the incubator. Reconnect, if necessary.
Sensor Off	E6	1	Reattach sensor to patient.
Light Pulse Search	-	PS	Ensure proper sensor application. Reposition sensor, if necessary.
Blink Pulse Search	-	PS	
Light Interference	E5	1	
Blink Interference	E5	1	

SECTION 7: SPECIFICATIONS

ESSENTIAL PERFORMANCE

- The accuracy of the set temperature to the real temperature will be maintained within ± 2° C at ambient temperatures between 10 and 20° C and within ± 1.5° C at an ambient temperature of 25° C ± 1° C for normal operation.
- In the event that the temperature is outside of the prescribed range, an audible alarm will be supplied.
- The warm up time for the incubator with large chamber, as defined by 60601-2-20 section 201.12.1.107 shall be 20 minutes* - as defined in our IFU.
- The indication of the temperature shall be accurate within 1° C when measured with a standard thermometer at a point 10 cm above the middle of the mattress.
- The O_2 Monitor shall be accurate within 2.5% + 2.5% of gas level (Volume Fraction of Gas Level).
- When the power supply falls outside of the normal values for operation, the incubator shall switch over to its internal battery, and shall display an indicator that the device is operating on battery power.
- For incubators equipped with SpO_2 capability, the SpO_2 accuracy shall be less than or equal to 4% over the range of 70-100% SaO_2.
- For incubators equipped with SpO_2 capability, the Pulse Rate accuracy shall be less than or equal to 5 bpm over the range of 25-240 bpm.
- For incubators equipped with SpO_2 capability, SpO_2 level low shall create an audible and visual alarm.
- For incubators equipped with SpO_2 capability, alarms shall be generated in the event of probe or patient cable failures, or if the SpO_2 system is incapable of updating the measured data for a period of 30 seconds.

GENERAL MECHANICAL SPECIFICATIONS

	Height inches (cm)	**Width** inches (cm)	**Depth** inches (cm)	**Weight** lbs. (kg)
A750i Incubator and Chamber with Cart	48.3 (122.6)	50 (127)	24 (61)	166.5 (75)

Mattress Tray Dimensions	11 ¾ × 23 ¾ × 1 in	29.8 × 60.3 × 2.5 cm
Infant Chamber Vertical Clearance	9 in	22.9 cm
Front Access Door with 2 Hand Ports	8 × 22 ¼ in	20.3 × 56.5 cm

NOTE: *Dimensions and weights are approximate. Height dimensions are given such that, when added, the approximate total height is given.*

SECTION 7: SPECIFICATIONS

Mounting Provisions without Cart

Four 3/8-16UNC mounting holes on the bottom of the incubator are intended to be utilized to mount the incubator to an interface that will securely fix the incubator system in a hospital setting as appropriate. It is the customer's responsibility to ensure that any safety requirements have been addressed on the installation. Unless otherwise specified maximum additional equipment weight limited to 10 lbs.

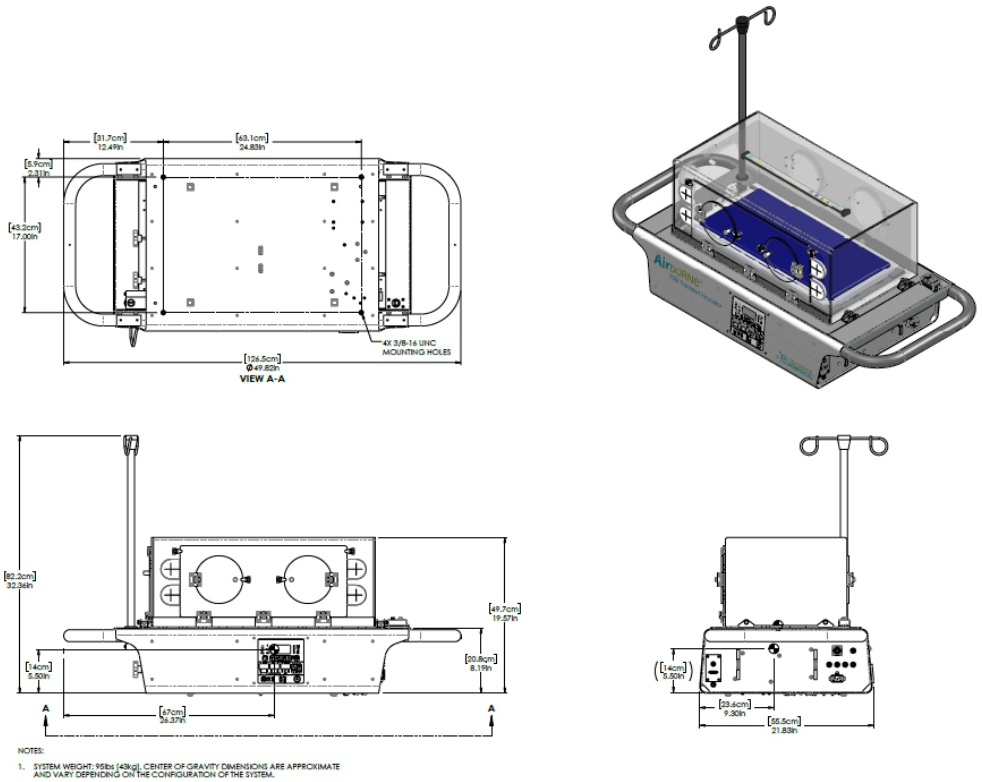

Figure 7 - 1

ELECTRICAL SPECIFICATIONS

AC Power	120 VAC, 50 - 400 Hz, 3 Amps
	230 VAC, 50 - 400 Hz, 3 Amps
External DC Power	12 volts 10 Amps
Internal Battery	One 12 volt 26 AH Sealed Lead/Acid type
Battery Life	Approx. 200 cycles
Nominal Battery Recharge (90%) Time	8 Hr. on AC, Unit Off
Nominal Battery Operation Time	3 Hr. Chamber at 37° C Ambient 20° C
Examination Light	5 Watt

EMC SPECIFICATIONS

EMC Compliance

The Transport Incubator has been tested and found to comply with limits for electromagnetic interference and suseptibility as defined by IEC 60601-1-2. However, this equipment may radiate radio frequency (RF) energy and may cause harmful interference to other devices. The Transport Incubator is intended for use in an electromagnetic environment in which radiated RF disturbances are controlled. The customer or the user of the Transport Incubator can help prevent electromagnetic interference by operating the device in the environments and with the minimum separation distances specified in the Service Manual. Additionally, periodic maintenance as specified by International Biomedical will allow the device to continue to provide basic safety and essential performance.

OPERATIONAL SPECIFICATIONS

Temperature Setpoint---------- 17° C to 38.9° C, 0.1° C increments

Digital Display Resolution---------- 0.1° C

Digital Display Accuracy---------- ± 1° C in range 10° to 45° C

Warmup time[2]---------- 20 minutes ± 20%, large chamber

Carbon dioxide concentration[3] ---------- < 0.5%

Maximum Infant Weight ---------- 16 lb (7.3 kg)

Display update period---------- 1 second

PULSE OXIMETER SPECIFICATIONS (OPTIONAL FEATURE)

Range

Oxygen Saturation---------- 1% - 100%

Pulse Rate ---------- 25-240 bpm

Perfusion Index (Masimo Only) ---------- 0.02% to 20%

Resolution

Oxygen Saturation---------- 1%

Pulse Rate ---------- 1 bpm

Sensor Peak Wavelengths

Peak wavelength information may be useful to clinicians, such as those performing photodynamic therapy.

Masimo ---------- 660 nm (red light), 905 nm (infrared light)

Nellcor---------- 660 nm (red light), 900 nm (infrared light)

---

[2] As determined by EN60601-2-20, clause 201.12.1.107. Time to rise 11° C, when control temperature is set 12° C above ambient.

[3] As determined by EN60601-2-20, clause 201.12.4.2.101. Measured 15 cm from 4% CO_2 mixture administered at rate of 750 ml/min, 10 cm above center of mattress.

Sensor Maximum Power Output

Masimo ---------- less than 15 mW (at 50 mA pulsed)

Nellcor---------- less than 15 mW

Masimo Sensor Accuracy[4]

During No Motion Conditions[5]

Oxygen Saturation - Neonates ----------	70 - 100%	± 3%
	0 - 69%	unspecified
Oxygen Saturation - Pediatrics ----------	70 - 100%	± 2%
	0 - 69%	unspecified
Pulse Rate - Neonates / Pediatrics--------	25 - 240 bpm	± 3 bpm

During Motion Conditions[6,7]

Oxygen Saturation - Neonates / Pediatrics ------	70 - 100%	± 3%
	0 - 69%	unspecified
Pulse Rate - Neonates / Pediatrics----------	25 - 240 bpm	± 5 bpm

Low Perfusion (where 0.02% Pulse Amplitude and % Transmission > 5%)[8]

Oxygen Saturation - Neonates / Pediatrics ---------- ± 2%

Pulse Rate - Neonates / Pediatrics---------- ± 3 bpm

---

4 Masimo sensors have been validated for pulse rate accuracy for the range of 25 - 240 bpm in bench top testing against a Biotek Index 2 simulator. This variation equals plus or minus one standard deviation, which encompasses 68% of the population.

5 Masimo SET technology with LNCS sensors have been validated for no motion accuracy in human blood studies on healthy adult male and female volunteers with light to dark skin pigmentation in induced hypoxia studies in the range of 70-100% SpO_2 against a laboratory co-oximeter and ECG monitor. This variation equals plus or minus one standard deviation, which encompasses 68% of the population. The saturation accuracy of the neonatal sensors was validated on adult male and female volunteers with light to dark skin pigmentation and 1% was added to account for the properties of fetal hemoglobin.

6 Masimo SET technology with LNCS sensors has been validated for motion accuracy in human blood studies on healthy adult male and female volunteers with light to dark skin pigmentation in induced hypoxia studies while performing rubbing and tapping motions, at 2 to 4 Hz at an amplitude of 1 to 2 cm and a non-repetitive motion between 1 to 5 Hz at an amplitude of 2 to 3 cm in induced hypoxia studies in the range of 70-100% SpO_2 against a laboratory co-oximeter and ECG monitor. This variation equals plus or minus one standard deviation, which encompasses 68% of the population.

7 The Masimo SET Technology with LNCS Neo sensors has been validated for neonatal motion accuracy in human blood studies on healthy adult volunteers in induced hypoxia studies while performing rubbing and tapping motions, at 2 to 4 Hz at an amplitude of 1 to 2 cm and a non-repetitive motion between 1 to 5 Hz at an amplitude of 2 to 3 cm in induced hypoxia studies in the range of 70-100% SpO_2 against a laboratory CO-oximeter and ECG monitor. 1% has been added to the saturation accuracy to account for the effects of fetal hemoglobin. This variation equals plus or minus one standard deviation, which encompasses 68% of the population.

8 Masimo SET technology has been validated for low perfusion accuracy in bench top testing against a Biotek Index 2 simulator and Masimo's simulator with signal strengths of greater than 0.02% and a % transmission of greater than 5% for saturations ranging from 70 to 100%. This variation equals plus or minus one standard deviation, which encompasses 68% of the population.

SECTION 7: SPECIFICATIONS

Nellcor Sensor Accuracy[9,10]

Oxygen Saturation (70-100% range) ---------- ± 2% (OxiMax adhesive sensors)

Oxygen Saturation (60-80% range) ---------- ± 3% (MAX sensors)

Pulse Rate ---------- 20 - 240 bpm ± 3 bpm

Interfering Substances

Carboxyhemoglobin may erroneously increase readings. The level of increase is approximately equal to the amount of carboxyhemoglobin present. Dyes, or any substance containing dyes, that change usual arterial pigmentation may cause erroneous readings.

OXYGEN MONITOR SPECIFICATIONS (OPTIONAL FEATURE)

Measurement Range ---------- 10.0% to 100%

Resolution ---------- 0.1%

Response Time ---------- < 16 seconds for 90% response
< 25 seconds for 97% response

Accuracy ---------- ± 4.0% over measurement range

Stability ---------- Less than 2% drift over 8 hours at constant temperature and pressure

Required Sample Flow ---------- Minimal 3cc/minute, 100cc/minute typical

Operating Temperature ---------- 5° to 40° C (31 - 104°F)

INTERFERING SUBSTANCES

Interferent	Volume % Dry	Interference in Oxygen Reading
Nitrous Oxide	75%	< 2%
Carbon Dioxide	10%	< 2%
Halothane	5%	< 2%
Enflurane	5%	< 2%
Isoflurane	5%	< 2%
Helium	70%	< 2%
Sevoflurane	6%	< 2%
Desflurane	15%	< 2%

[9] The NELL-1 PulseOximeter board has been validated, in part, by studies conducted on healthy adult male and female volunteers, spanning a range of skin pigmentations and ranging in age from 18-50 years old, under controlled laboratory conditions over the saturation range of 70% to 100%. SpO_2 was compared to SaO_2 measured to blood CO-oximetry, and pulse rate was compared to EKG heart rate. Clinical functionality has been demonstrated on a population of hospitalized neonate and infant patients (MAX sensors: 1-23 days old, weight from 750-4100 grams, Softcare sensors: 24-40 weeks old, weight from 710-5000 grams).

[10] The NELL-1 PulseOximeter board has been validated for low perfusion accuracy using signals supplied by a patient simulator. SpO_2 and pulse rate values were varied across the monitoring range over a range of weak signal conditions and compared to the known true saturation and pulse rate of the input signals.

OPERATING, STORAGE, AND TRANSPORT ENVIRONMENT

The infant transport incubator requires the following environmental conditions for transport and storage:

Temperature ---------- -15° C to 40° C
Humidity ---------- 10% to 95% non-condensing
Pressure ---------- 50 kPa to 106 kPa

The requirements of the International Standard, EN60601-2-20:2009 are met. The environment, if not further specified in the standard, is:

Temperature ---------- 21° C to 25° C
Humidity ---------- 45% to 75% non-condensing
Pressure ---------- 86 kPa to 106 kPa

SECTION 8: WARRANTY

Unless otherwise specified, International Biomedical warrants all products of its manufacture at the time of shipment to be free from defects of material and workmanship for a period of twelve months from the date of shipment when owned by the original purchaser. Any product which is believed to be defective, if returned within twelve months after date of shipment by the Company with freight prepaid and found by the Company's inspection to be defective within the terms of this warranty, will be repaired or replaced free of charge and shipped, freight prepaid, to any point in the United States. If inspection by the Company of any such product does not disclose any defect within the terms of this warranty, the Company's regular charges for repairs or replacement and freight shall apply. All consumable and disposable products are guaranteed to be free from defects upon shipment only. The warranty period for batteries is limited to 90 days from date of shipment.

This warranty specifically excludes and replaces all other express and implied warranties. The Company shall have no liability under any warranty in any amount greater than the Company receives for the sale of the product involved. The use and manner of use of the Company's products shall be the responsibility of the purchaser and the purchaser covenants and agrees to indemnify and save harmless the Company in respect to any loss and damage that may arise through the use by the purchaser, or others, of any of the Company's products.

This warranty is rendered void and International Biomedical cannot be held liable for conditions resultant therefrom if:

1. Damage to the unit is incurred as a result of mishandling.
2. The customer fails to maintain the unit in a proper manner.
3. The customer uses any parts, accessories, or fittings not specified or sold by International Biomedical.
4. Sale or Service is performed by a non-certified service / dealer agency or any other unauthorized agency.

All shipping claims must be made within 30 days from date of shipment from International Biomedical; otherwise factory will not be liable for claims of missing items. Any item ordered in error and returned to the factory for credit, will be subject to a minimum restocking charge of 15%. Requests for returning items must be made within 30 days of factory shipment date.

International Biomedical will accept no returned goods without a Returned Goods Authorization number (RGA) obtained from Customer Service Department.

EUROPEAN REGULATORY AFFAIRS REPRESENTATIVE

The authorized regulatory affairs representative in Europe for the incubator is:

Emergo Europe
Westervoortsedijk 60
6827 AT
Arnhem, The Netherlands

PARTS AND ACCESSORIES

Power Cords (vary depending on customer requirements)

216-0350	Strap, Infant Positioning - (Reorder PN 731-2950, Case of 20)
700-3409	409B Skin Temperature Probe, Reusable
711-1860	Cable, Oxygen Sensor to Side Panel
711-0022	Cable Assy, Patient, 10', Masimo LNCS
711-1920	Cable Assy Patient, 10 Foot, Nellcor OxiMax
731-0004	Phototherapy Eye Shields, Small
731-9592	Cover, Thermal, Incubator - Large, Head and Foot Door

For general incubator assistance or for parts and accessories, contact:

International Biomedical
8206 Cross Park Drive
Austin, TX 78754

512-873-0033

www.int-bio.com

For information on Masimo pulse oximeter sensors and cables, contact:

Masimo Corporation
52 Discovery
Irvine, CA 92618

949-297-7000

www.masimo.com

For information on Nellcor pulse oximeter sensors and cables, contact:

Covidien
6135 Gunbarrel Avenue
Boulder, CO 80301

800-635-5267 or 303-530-2300

www.nellcor.com