AirBORNe®

A750i Transport Incubator

Service Manual

international BIOMEDICAL®

A750i
Infant Transport Incubator System with Optional PulseOx
Service Manual

- ***Phone: (512) 873-0033***
- ***Fax: (512) 873-9090***
- ***E-Mail: sales@int-bio.com***
- ***Website: http://www.int-bio.com***

- ***Mailing address:***

  International Biomedical
  8206 Cross Park Dr.
  Austin, TX 78754
  USA

- ***Authorized representative in Europe for Regulatory Affairs:***

  Emergo Europe
  Westervoortsedijk 60
  6827 AT
  Arnhem, The Netherlands

TABLE OF CONTENTS

LANGUAGE DISCLAIMER 4
SECTION 1: GENERAL INFORMATION 11
INTRODUCTION 11
CLASSIFICATION 11
SAFETY SUMMARY 12
IMPORTANT SAFETY CONSIDERATIONS 12
SYMBOLS 18
SECTION 2: SET-UP INSTRUCTIONS 19
MODEL A750i UNPACKING AND ASSEMBLY 19
ASSEMBLY OF THE AIRWAY MANAGEMENT SYSTEM (OPTIONAL) 23
INSTALLATION OF THE MVP-10 OR CROSSVENT 2i VENTILATOR (OPTIONAL) 24
INSTALLATION OF THE SUCTION UNIT (OPTIONAL) 26
AIR AND OXYGEN TANKS 27
OPERATIONAL CHECK 27
SECTION 3: OPERATING INSTRUCTIONS 28
FRONT PANEL DISPLAY FEATURES 28
SIDE PANEL FEATURES 33
POWER FEATURES 34
POWERING UP THE INCUBATOR 36
POWERING OFF THE INCUBATOR 36
DISPLAY MODES 37
TEMPERATURE CONTROL 37
SETTING THE INFANT CHAMBER AIR TEMPERATURE 37
PULSE OXIMETER AND OXYGEN MONITOR CONTROL (OPTIONAL FEATURE) 38
ALARMS / INDICATORS 38
EXTERNAL LIGHTING 41
SKIN TEMPERATURE PROBE 41
SECTION 4: PULSE OXIMETRY (OPTIONAL FEATURE) 42
PULSE OXIMETER PRINCIPLES OF OPERATION 42
PULSE OXIMETER SET-UP INSTRUCTIONS 44
INITIAL SET-UP 44
SETTING HIGH AND LOW %SpO_2 ALARMS 44
SETTING HIGH AND LOW PULSE RATE ALARMS 45
SETTING THE ALGORITHM MODE (MASIMO ONLY) 45
SETTING THE AVERAGING MODE (MASIMO ONLY) 46
SETTING THE PERFUSION INDEX (MASIMO ONLY) 47
OPERATIONAL ALARMS AND WARNINGS 47
TEST OF OPERATIONAL ALARMS 49
PULSE OXIMETRY SENSORS 49
PULSE OXIMETRY TESTERS / SIMULATORS 50
SECTION 5: OXYGEN MONITOR (OPTIONAL FEATURE) 51
OXYGEN MONITOR PRINCIPLES OF OPERATION 51
OXYGEN MONITOR SET-UP INSTRUCTIONS 52
INITIAL SET-UP 52
SETTING HIGH AND LOW OXYGEN ALARMS 52
OXYGEN MONITOR CALIBRATION 53
OPERATIONAL ALARMS AND WARNINGS 54
TEST OF OPERATIONAL ALARMS 54
OXYGEN SENSOR 55
SECTION 6: PREVENTATIVE MAINTENANCE 56

TABLE OF CONTENTS

DAILY MAINTENANCE 56
OPERATIONAL CHECK 56
AIR / OXYGEN SYSTEM 57
INFANT CHAMBER CHECK 58
CART AND ACCESSORIES 58
SENSORS AND CABLES (OPTIONAL EQUIPMENT) 58
CLEANING OF INCUBATOR AND CHAMBER 59
CLEANING OF CABLES (OPTIONAL EQUIPMENT) 59
CLEANING OF PULSE OXIMETRY SENSOR (OPTIONAL EQUIPMENT) 59
CLEANING OF OXYGEN SENSOR (OPTIONAL EQUIPMENT) 59
MONTHLY MAINTENANCE 60
OPERATIONAL CHECK 60
KEYBOARD / LED CHECK (OPTIONAL FEATURE) 60
ALARM MUTE CHECK (OPTIONAL FEATURE) 60
TANK INSPECTION 60
INFANT CHAMBER INSPECTION & CLEANING 61
BATTERY TEST 61
AIR FLOW SYSTEM INSPECTION & CLEANING 62
HARDWARE 62
BATTERY CARE 63
PRODUCT DISPOSAL / RECYCLING 63
SECTION 7: TROUBLESHOOTING 64
GENERAL TROUBLESHOOTING 64
MAIN DISPLAY ERROR CODES 65
PULSE OXIMETER AND OXYGEN MONITOR FAILURE CODES (OPTIONAL FEATURE) 65
SECTION 8: INTERNAL COMPONENT ACCESS 68
ELECTRONICS COMPARTMENT ACCESS 68
BATTERY REMOVAL 69
CONTROL BOARD REMOVAL 69
DISPLAY BOARD REMOVAL 70
PULSEOX DISPLAY BOARD REMOVAL 70
PULSE OXIMETER BOARD REMOVAL 71
SECTION 9: CALIBRATION PROCEDURES 72
CALIBRATION TEST EQUIPMENT REQUIRED 72
SYSTEM CALIBRATION PROCEDURE 72
CONTROL BOARD CALIBRATION PROCEDURE 75
DISPLAY BOARD CALIBRATION PROCEDURE 78
SECTION 10: CIRCUIT DESCRIPTION 79
CONTROL BOARD 79
TEMPERATURE REGULATION 79
FAILSAFE TEMPERATURE LIMIT 80
ALARMS 80
POWER FAIL ALARM 81
VOLTAGE REFERENCE 81
LAMP DRIVE CIRCUIT 81
BATTERY CHARGER 82
POWER SOURCE SELECTION 83
DISPLAY BOARD 83
MEASURED TEMPERATURE DISPLAY 83
MAIN INCUBATOR ALARM AND POWER INDICATORS 84

TABLE OF CONTENTS

TEMPERATURE SETPOINT 84
SETPOINT ALARM 84
PULSE, SpO_2, AND OXYGEN DISPLAYS (OPTIONAL FEATURES) 84
SATURATION, PULSE, OXYGEN, AND PULSE GRAPH DISPLAYS (OPTIONAL FEATURES) 85
ALARM AND POWER INDICATORS (OPTIONAL FEATURES) 85
ALARM SETPOINTS (OPTIONAL FEATURE) 85
SETPOINT ALARM (OPTIONAL FEATURE) 85
OTHER ALARM AND WARNING CONDITIONS 85
SECTION 11: SPECIFICATIONS 86
GENERAL MECHANICAL SPECIFICATIONS 86
ELECTRICAL SPECIFICATIONS 87
OPERATIONAL SPECIFICATIONS 87
EMC SPECIFICATIONS 87
ESSENTIAL PERFORMANCE 91
PULSE OXIMETER SPECIFICATIONS (OPTIONAL FEATURE) 92
OXYGEN MONITOR SPECIFICATIONS (OPTIONAL FEATURE) 94
OPERATING, STORAGE, AND TRANSPORT ENVIRONMENT 95
SECTION 12: WARRANTY 96
SECTION 13: SYSTEM DOCUMENTATION 97
EUROPEAN REGULATORY AFFAIRS REPRESENTATIVE 97
PARTS AND ACCESSORIES 97
SECTION 14: SCHEMATICS / DRAWINGS 98
SYSTEM WIRING DIAGRAM, MASIMO PULSEOX (002-0011) 98
SYSTEM WIRING DIAGRAM, NELLCOR PULSEOX (002-0014) 99
CONTROL BOARD SCHEMATIC (001-5181) 100
PULSEOX DISPLAY BOARD SCHEMATIC (001-5193) 101
SCHEMATIC, NON-PULSEOX DISPLAY BOARD (001-5192) 107
TEMPERATURE SENSOR RESISTANCE VALUES 109
SCHEMATIC, PNEUMATIC A750i CART (002-4010) 110

LANGUAGE DISCLAIMER

WARNING:

This service manual is available in English only.

(EN)

- If a customer's service provider requires a language other than English, it is the customer's responsibility to provide translation services.
- Do not attempt to service the equipment unless this service manual has been consulted and is understood.
- Failure to heed this warning may result in injury to the service provider, operator, or patient from electric shock, mechanical hazards, or other hazards.

VÝSTRAHA

Tento provozní návod existuje pouze v anglickém jazyce.

(CS)

- V případě, že externí služba zákazníkům potřebuje návod v jiném jazyce, je zajištění překladu do odpovídajícího jazyka úkolem zákazníka.
- Nesnažte se o údržbu tohoto zařízení, aniž byste si přečetli tento provozní návod a pochopili jeho obsah.
- V případě nedodržování této výstrahy může dojít k poranění pracovníka prodejního servisu, obslužného personálu nebo pacientů vlivem elektrického proudu, respektive vlivem mechanických či jiných rizik.

ADVARSEL

Denne servicemanual findes kun på engelsk.

(DA)

- Hvis en kundes tekniker har brug for et andet sprog end engelsk, er det kundens ansvar at sørge for oversættelse.
- Forsøg ikke at servicere udstyret uden at læse og forstå denne servicemanual.
- Manglende overholdelse af denne advarsel kan medføre skade på grund af elektrisk stød, mekanisk eller anden fare for teknikeren, operatøren eller patienten.

WAARSCHUWING

Deze onderhoudshandleiding is enkel in het Engels verkrijgbaar.

(NL)

- Als het onderhoudspersoneel een andere taal vereist, dan is de klant verantwoordelijk voor de vertaling ervan.
- Probeer de apparatuur niet te onderhouden alvorens deze onderhoudshandleiding werd geraadpleegd en begrepen is.
- Indien deze waarschuwing niet wordt opgevolgd, zou het onderhoudspersoneel, de operator of een patiënt gewond kunnen raken als gevolg van een elektrische schok, mechanische of andere gevaren.

LANGUAGE DISCLAIMER

(BG)

ПРЕДУПРЕЖДЕНИЕ

Това упътване за работа е налично само на английски език.

- Ако доставчикът на услугата на клиента изиска друг език, задължение на клиента е да осигури превод.
- Не използвайте оборудването, преди да сте се консултирали и разбрали упътването за работа.
- Неспазването на това предупреждение може да доведе до нараняване на доставчика на услугата, оператора или пациента в резултат на токов удар, механична или друга опасност.

(ZH-CN)

警告

本维修手册仅提供英文版本。

- 如果客户的维修服务人员需要非英文版本，则客户需自行提供翻译服务。
- 未详细阅读和完全理解本维修手册之前，不得进行维修。
- 忽略本警告可能对维修服务人员、操作人员或患者造成电击、机械伤害或其他形式的伤害。

(ZH-HK)

警告

本服務手冊僅提供英文版本。

- 倘若客戶的服務供應商需要英文以外之服務手冊，客戶有責任提供翻譯服務。
- 除非已參閱本服務手冊及明白其內容，否則切勿嘗試維修設備。
- 不遵從本警告或會令服務供應商、網絡供應商或病人受到觸電、機械性或其他的危險。

(ZH-TW)

警告

本維修手冊僅有英文版。

- 若客戶的維修廠商需要英文版以外的語言，應由客戶自行提供翻譯服務。
- 請勿試圖維修本設備，除非 您已查閱並瞭解本維修手冊。
- 若未留意本警告，可能導致維修廠商、操作員或病患因觸電、機械或其他危險而受傷。

(HR)

UPOZORENJE

Ovaj servisni priručnik dostupan je na engleskom jeziku.

- Ako davatelj usluge klijenta treba neki drugi jezik, klijent je dužan osigurati prijevod.
- Ne pokušavajte servisirati opremu ako niste u potpunosti pročitali i razumjeli ovaj servisni priručnik.
- Zanemarite li ovo upozorenje, može doći do ozljede davatelja usluge, operatera ili pacijenta uslijed strujnog udara, mehaničkih ili drugih rizika.

LANGUAGE DISCLAIMER

HOIATUS

See teenindusjuhend on saadaval ainult inglise keeles

(ET)

- Kui klienditeeninduse osutaja nõuab juhendit inglise keelest erinevas keeles, vastutab klient tõlketeenuse osutamise eest.
- Ärge üritage seadmeid teenindada enne eelnevalt käesoleva teenindusjuhendiga tutvumist ja sellest aru saamist.
- Käesoleva hoiatuse eiramine võib põhjustada teenuseosutaja, operaatori või patsiendi vigastamist elektrilöögi, mehaanilise või muu ohu tagajärjel.

VAROITUS

Tämä huolto-ohje on saatavilla vain englanniksi.

(FI)

- Jos asiakkaan huoltohenkilöstö vaatii muuta kuin englanninkielistä materiaalia, tarvittavan käännöksen hankkiminen on asiakkaan vastuulla.
- Älä yritä korjata laitteistoa ennen kuin olet varmasti lukenut ja ymmärtänyt tämän huolto-ohjeen.
- Mikäli tätä varoitusta ei noudateta, seurauksena voi olla huoltohenkilöstön, laitteiston käyttäjän tai potilaan vahingoittuminen sähköiskun, mekaanisen vian tai muun vaaratilanteen vuoksi.

ATTENTION

Ce manuel d'installation et de maintenance est disponible uniquement en anglais.

(FR)

- Si le technicien d'un client a besoin de ce manuel dans une langue autre que l'anglais, il incombe au client de le faire traduire.
- Ne pas tenter d'intervenir sur les équipements tant que ce manuel d'installation et de maintenance n'a pas été consulté et compris.
- Le non-respect de cet avertissement peut entraîner chez le technicien, l'opérateur ou le patient des blessures dues à des dangers électriques, mécaniques ou autres.

WARNUNG

Diese Serviceanleitung existiert nur in englischer Sprache.

(DE)

- Falls ein fremder Kundendienst eine andere Sprache benötigt, ist es Aufgabe des Kunden für eine entsprechende Übersetzung zu sorgen.
- Versuchen Sie nicht diese Anlage zu warten, ohne diese Serviceanleitung gelesen und verstanden zu haben.
- Wird diese Warnung nicht beachtet, so kann es zu Verletzungen des Kundendiensttechnikers, des Bedieners oder des Patienten durch Stromschläge, mechanische oder sonstige Gefahren kommen.

LANGUAGE DISCLAIMER

(EL)

ΠΡΟΕΙΔΟΠΟΙΗΣΗ

Το παρόν εγχειρίδιο σέρβις διατίθεται μόνο στα αγγλικά.

- Εάν ο τεχνικός σέρβις ενός πελάτη απαιτεί το παρόν εγχειρίδιο σε γλώσσα εκτός των αγγλικών, αποτελεί ευθύνη του πελάτη να παρέχει τις υπηρεσίες μετάφρασης.
- Μην επιχειρήσετε την εκτέλεση εργασιών σέρβις στον εξοπλισμό αν δεν έχετε συμβουλευτεί και κατανοήσει το παρόν εγχειρίδιο σέρβις.
- Αν δεν προσέξετε την προειδοποίηση αυτή, ενδέχεται να προκληθεί τραυματισμός στον τεχνικό σέρβις, στο χειριστή ή στον ασθενή από ηλεκτροπληξία, μηχανικούς ή άλλους κινδύνους.

(HU)

FIGYELMEZTETÉS

Ezen karbantartási kézikönyv kizárólag angol nyelven érhető el.

- Ha a vevő szolgáltatója angoltól eltérő nyelvre tart igényt, akkor a vevő felelőssége a fordítás elkészíttetése.
- Ne próbálja elkezdeni használni a berendezést, amíg a karbantartási kézikönyvben leírtakat nem értelmezték.
- Ezen figyelmeztetés figyelmen kívül hagyása a szolgáltató, működtető vagy a beteg áramütés, mechanikai vagy egyéb veszélyhelyzet miatti sérülését eredményezheti.

(IS)

AÐVÖRUN

Þessi þjónustuhandbók er aðeins fáanleg á ensku.

- Ef að þjónustuveitandi viðskiptamanns þarfnast annas tungumáls en ensku, er það skylda viðskiptamanns að skaffa tungumálaþjónustu.
- Reynið ekki að afgreiða tækið nema að þessi þjónustuhandbók hefur verið skoðuð og skilin.
- Brot á sinna þessari aðvörun getur leitt til meiðsla á þjónustuveitanda, stjórnanda eða sjúklings frá raflosti, vélrænu eða öðrum áhættum.

(IT)

AVVERTENZA

Il presente manuale di manutenzione è disponibile soltanto in lingua inglese.

- Se un addetto alla manutenzione richiede il manuale in una lingua diversa, il cliente è tenuto a provvedere direttamente alla traduzione.
- Procedere alla manutenzione dell'apparecchiatura solo dopo aver consultato il presente manuale ed averne compreso il contenuto.
- Il mancato rispetto della presente avvertenza potrebbe causare lesioni all'addetto alla manutenzione, all'operatore o ai pazienti provocate da scosse elettriche, urti meccanici o altri rischi.

(JA)

警告

このサービスマニュアルには英語版しかありません。

- サービスを担当される業者が英語以外の言語を要求される場合、翻訳作業はその業者の責任で行うものとさせていただきます。
- このサービスマニュアルを熟読し理解せずに、装置のサービスを行わないでください。
- この警告に従わない場合、サービスを担当される方、操作員あるいは患者 さんが、感電や機械的又はその他の危険により負傷する可能性があります。

LANGUAGE DISCLAIMER

(KO)

경고

본 서비스 매뉴얼은 영어로만 이용하실 수 있습니다.

- 고객의 서비스 제공자가 영어 이외의 언어를 요구할 경우, 번역 서비스를 제공하는 것은 고객의 책임입니다.
- 본 서비스 매뉴얼을 참조하여 숙지하지 않은 이상 해당 장비를 수리하려고 시도하지 마십시오.
- 본 경고 사항에 유의하지 않으면 전기 쇼크, 기계적 위험, 또는 기타 위험으로 인해 서비스 제공자, 사용자 또는 환자에게 부상을 입힐 수 있습니다.

(LV)

BRĪDINĀJUMS

Šī apkopes rokasgrāmata ir pieejama tikai angļu valodā.

- Ja klienta apkopes sniedzējam nepieciešama informācija citā valodā, klienta pienākums ir nodrošināt tulkojumu.
- Neveiciet aprīkojuma apkopi bez apkopes rokasgrāmatas izlasīšanas un saprašanas.
- Šī brīdinājuma neievērošanas rezultātā var rasties elektriskās strāvas trieciena, mehānisku vai citu faktoru izraisītu traumu risks apkopes sniedzējam, operatoram vai pacientam.

(LT)

ĮSPĖJIMAS

Šis eksploatavimo vadovas yra tik anglų kalba.

- Jei kliento paslaugų tiekėjas reikalauja vadovo kita kalba – ne anglų, suteikti vertimo paslaugas privalo klientas.
- Nemėginkite atlikti įrangos techninės priežiūros, jei neperskaitėte ar nesupratote šio eksploatavimo vadovo.
- Jei nepaisysite šio įspėjimo, galimi paslaugų tiekėjo, operatoriaus ar paciento sužalojimai dėl elektros šoko, mechaninių ar kitų pavojų.

(NO)

ADVARSEL

Denne servicehåndboken finnes bare på engelsk.

- Hvis kundens serviceleverandør har bruk for et annet språk, er det kundens ansvar å sørge for oversettelse.
- Ikke forsøk å reparere utstyret uten at denne servicehåndboken er lest og forstått.
- Manglende hensyn til denne advarselen kan føre til at serviceleverandøren, operatøren eller pasienten skades på grunn av elektrisk støt, mekaniske eller andre farer.

(PL)

OSTRZEŻENIE

Niniejszy podręcznik serwisowy dostępny jest jedynie w języku angielskim.

- Jeśli serwisant klienta wymaga języka innego niż angielski, zapewnienie usługi tłumaczenia jest obowiązkiem klienta.
- Nie próbować serwisować urządzenia bez zapoznania się z niniejszym podręcznikiem serwisowym i zrozumienia go.
- Niezastosowanie się do tego ostrzeżenia może doprowadzić do obrażeń serwisanta, operatora lub pacjenta w wyniku porażenia prądem elektrycznym, zagrożenia mechanicznego bądź innego.

LANGUAGE DISCLAIMER

(PT-BR)

AVISO

Este manual de assistência técnica encontra-se disponível unicamente em inglês.

- Se outro serviço de assistência técnica solicitar a tradução deste manual, caberá ao cliente fornecer os serviços de tradução.
- Não tente reparar o equipamento sem ter consultado e compreendido este manual de assistência técnica.
- A não observância deste aviso pode ocasionar ferimentos no técnico, operador ou paciente decorrentes de choques elétricos, mecânicos ou outros.

(PT-PT)

ATENÇÃO

Este manual de assistência técnica só se encontra disponível em inglês.

- Se qualquer outro serviço de assistência técnica solicitar este manual noutro idioma, é da responsabilidade do cliente fornecer os serviços de tradução.
- Não tente reparar o equipamento sem ter consultado e compreendido este manual de assistência técnica.
- O não cumprimento deste aviso pode colocar em perigo a segurança do técnico, do operador ou do paciente devido a choques eléctricos, mecânicos ou outros.

(RO)

ATENȚIE

Acest manual de service este disponibil doar în limba engleză.

- Dacă un furnizor de servicii pentru clienți necesită o altă limbă decât cea engleză, este de datoria clientului să furnizeze o traducere.
- Nu încercați să reparați echipamentul decât ulterior consultării şi înțelegerii acestui manual de service.
- Ignorarea acestui avertisment ar putea duce la rănirea depanatorului, operatorului sau pacientului în urma pericolelor de electrocutare, mecanice sau de altă natură.

(RU)

ОСТОРОЖНО!

Данное руководство по техническому обслуживанию представлено только на английском языке.

- Если сервисному персоналу клиента необходимо руководство не на английском, а на каком-то другом языке, клиенту следует самостоятельно обеспечить перевод.
- Перед техническим обслуживанием оборудования обязательно обратитесь к данному руководству и поймите изложенные в нем сведения.
- Несоблюдение требований данного предупреждения может привести к тому, что специалист по техобслуживанию, оператор или пациент получит удар электрическим током, механическую травму или другое повреждение.

(SR)

UPOZORENJE

Ovo servisno uputstvo je dostupno samo na engleskom jeziku.

- Ako klijentov serviser zahteva neki drugi jezik, klijent je dužan da obezbedi prevodilačke usluge.
- Ne pokušavajte da opravite uređaj ako niste pročitali i razumeli ovo servisno uputstvo.
- Zanemarivanje ovog upozorenja može dovesti do povređivanja servisera, rukovaoca ili pacijenta usled strujnog udara ili mehaničkih i drugih opasnosti.

LANGUAGE DISCLAIMER

UPOZORNENIE

Tento návod na obsluhu je k dispozícii len v angličtine.

(SK)

- Ak zákazníkov poskytovateľ služieb vyžaduje iný jazyk ako angličtinu, poskytnutie prekladateľských služieb je zodpovednosťou zákazníka.
- Nepokúšajte sa o obsluhu zariadenia, kým si neprečítate návod na obluhu a neporozumiete mu.
- Zanedbanie tohto upozornenia môže spôsobiť zranenie poskytovateľa služieb, obsluhujúcej osoby alebo pacienta elektrickým prúdom, mechanické alebo iné ohrozenie.

ATENCION

Este manual de servicio sólo existe en inglés.

(ES)

- Si el encargado de mantenimiento de un cliente necesita un idioma que no sea el inglés, el cliente deberá encargarse de la traducción del manual.
- No se deberá dar servicio técnico al equipo, sin haber consultado y comprendido este manual de servicio.
- La no observancia del presente aviso puede dar lugar a que el proveedor de servicios, el operador o el paciente sufran lesiones provocadas por causas eléctricas, mecánicas o de otra naturaleza.

VARNING

Den här servicehandboken finns bara tillgänglig på engelska.

(SV)

- Om en kunds servicetekniker har behov av ett annat språk än engelska, ansvarar kunden för att tillhandahålla översättningstjänster.
- Försök inte utföra service på utrustningen om du inte har läst och förstår den här servicehandboken.
- Om du inte tar hänsyn till den här varningen kan det resultera i skador på serviceteknikern, operatören eller patienten till följd av elektriska stötar, mekaniska faror eller andra faror.

OPOZORILO

Ta servisni priročnik je na voljo samo v angleškem jeziku.·

(SL)

- Če ponudnik storitve stranke potrebuje priročnik v drugem jeziku, mora stranka zagotoviti prevod.·
- Ne poskušajte servisirati opreme, če tega priročnika niste v celoti prebrali in razumeli.·
- Če tega opozorila ne upoštevate, se lahko zaradi električnega udara, mehanskih ali drugih nevarnosti poškoduje ponudnik storitev, operater ali bolnik.

DİKKAT

Bu servis kılavuzunun sadece ingilizcesi mevcuttur.

(TR)

- Eğer müşteri teknisyeni bu kılavuzu ingilizce dışında bir başka lisandan talep ederse, bunu tercüme ettirmek müşteriye düşer.
- Servis kılavuzunu okuyup anlamadan ekipmanlara müdahale etmeyiniz.
- Bu uyarıya uyulmaması, elektrik, mekanik veya diğer tehlikelerden dolayı teknisyen, operatör veya hastanın yaralanmasına yol açabilir.

SECTION 1: GENERAL INFORMATION

INTRODUCTION

INDICATIONS FOR USE -

The transport incubator is a neonatal transport incubator. The incubator circulates warmed air at an operator selected, controlled temperature into a transparent chamber containing an infant. The structural integrity and weight of the incubator makes it suitable for ground and air transport. Auxiliary equipment for airway management and vital signs monitoring are not standard equipment. The system is to be operated by trained medical technical personnel.

The International Biomedical Model A750i Infant Transport Incubator with optional PulseOx (referred to herein as the incubator) provides a thermally regulated environment to support an infant's temperature requirements and has the capability to monitor vital information during transport. The pulse oximeter and oxygen monitor measure pulse rate, oxygen saturation, and oxygen concentration and allow the user to configure high and low alarm settings. The incubator circulates warmed air throughout the infant chamber to maintain the temperature at a user-selected setpoint. Chamber doors and hand ports provide quick and easy access to the infant. Positioning straps are provided to limit infant movement within the infant chamber. There are no known contraindications associated with the incubator.

NOTE: *The Pulse oximetry and oxygen monitoring is only available if the PulseOx version of the incubator was purchased.*

This service manual is designed to introduce the user to key features of the incubator, including safety issues, instructions for use, equipment maintenance and contact information. The manual should be read and understood by all users before using the transport incubator.

CLASSIFICATION

According to the standard EN60601-1 of the International Electrotechnical Commission, Medical electrical equipment, Part 1: General requirements for safety, the infant transport incubator is classified as follows:

- Class I / Internally Powered, according to the type of protection against electric shock
- Type B, according to the degree of protection against electric shock (i.e. the patient may not be electrically isolated from earth)
- Ordinary, according to the degree of protection against harmful ingress of water

- Equipment is not suitable for use in the presence of a flammable anesthetic mixture with air or with oxygen or nitric oxide.
- Continuous operation for the mode of operation

The pulse oximeter cables and sensors are classified as type BF, per the EN60601-1 electrical standard.

The skin temperature probe is classified as type BF, per EN60601-1 electrical standard (systems with optional PulseOx).

The skin temperature probe is classified as type B, per EN60601-1 electrical standard (systems without optional PulseOx).

SAFETY SUMMARY

The incubator is designed to be used by trained clinical users and/or biomedical engineers and operated in a manner consistent with the instructions contained in this manual. Refer to any additional training, procedures, requirements, or documentation beyond those identified here for operation and policies required within the institution. All personnel operating the incubator must be familiar with the warnings and operating procedures contained in this manual. International Biomedical is not to be held responsible if the incubator is used in a manner inconsistent with the instructions herein.

IMPORTANT SAFETY CONSIDERATIONS

The incubator has been tested and found to comply with limits for electromagnetic interference and susceptibility as defined by EN60601-1-2. However, this equipment can radiate radio frequency (RF) energy and may cause harmful interference to other devices. The incubator may also be affected by interference from other devices. If RF interference is suspected, relocate or shield the incubator to reduce or eliminate the effects.

Within certain governmental jurisdictions, all interconnected accessory equipment must be labeled by an approved testing laboratory. After interconnection with accessory equipment, risk (leakage) current and grounding requirements must be maintained.

SECTION 1: GENERAL INFORMATION

Safety concerns or additional pertinent information will be displayed using warnings, cautions, and notes, having the following significance:

WARNING: **Maintenance or operating procedure, technique, etc., which may result in personal injury or loss of life if not carefully followed.**

CAUTION: Maintenance or operating procedure, technique, etc., which may result in patient harm or damage to equipment if not carefully followed.

NOTE: *Maintenance or operating procedure, technique, etc., which is considered essential to emphasize.*

The principal **WARNING** and **CAUTION** notices to be observed in use of this incubator are brought together here for emphasis.

WARNINGS

- OBSERVE BEST PRACTICE: The instructions in this manual in no way supersede established medical procedures or staff preference concerning patient care.
- ENSURE UNIT IS PROPERLY GROUNDED: To ensure grounding reliability, only connect the power cord to a properly grounded, 3-wire hospital grade outlet of the proper voltage and frequency. DO NOT USE EXTENSION CORDS. If the integrity of the connection is in doubt, the incubator should be operated from its internal battery.
- EXPLOSION HAZARD: Do not use the examination light, the pulse oximeter, or oxygen monitor in the presence of flammable anesthetics or other flammable gases.
- USE OF OXYGEN INCREASES FIRE DANGER: Spark-producing auxiliary equipment should not be placed in or near the transport incubator.
- Avoid direct sunlight or radiant heat, which can cause a dangerous increase in chamber air temperature.
- Avoid eye exposure. Direct light exposure may cause eye damage. Infants must wear eye protection.
- The use of oxygen may increase the noise level within the infant chamber.
- Air and oxygen tanks are pressurized and must be properly secured.

- The transport incubator is Type B equipment and the baby may not be electrically isolated from earth. Care must be taken that additional equipment connected to the baby is electrically safe. To ensure patient electrical isolation, connect only to other equipment with electronically isolated circuits.
- Do not change the lamp and touch the patient simultaneously.
- When the infant tray is removed, do not touch exposed circuitry and patient simultaneously.
- This incubator was calibrated with the infant chamber originally supplied. If this chamber is exchanged for an infant chamber of a different configuration or size, the temperature calibration will be affected. Consult International Biomedical before returning the incubator to service.
- The incubator should be turned off and AC or DC power disconnected when cleaning.
- The use of devices which radiate high intensity electrical fields may affect the operation of the transport incubator. Constant assessment of the patient and all life support equipment is mandatory whenever interfering devices are operating on or near patient.
- When using the transport incubator adjacent to or stacked with other equipment, observe the operation of the transport incubator and the other equipment to ensure normal operation.
- Portable RF communications equipment (including peripherals such as antenna cables and external antennas) should be used no closer then 30 cm to any part of the transport incubator and associated cables. Otherwise, degradation of the performance of this equipment could occur.
- When the incubator is attached to a Ferno 146 Collapsible Cart, the two highest positions should not be used as they can cause a tip hazard.
- Do not use the pulse oximeter or oximetry sensors during magnetic resonance imaging (MRI) scanning. Induced current could potentially cause burns. The pulse oximeter may affect the MRI image and the MRI unit may affect the accuracy of the oximetry results.
- If using pulse oximetry during full body irradiation, keep the sensor out of the irradiation field. If the sensor is exposed to irradiation, the reading might be inaccurate or the unit might read zero for the duration of the active irradiation period.
- The pulse oximeter should NOT be used as an apnea monitor.

- If an alarm condition (other than exceptions listed herein) occurs while the MUTE button is activated, only visual alarm indicators will be activated.
- Pulse rate measurement is based on the optical detection of a peripheral flow pulse and therefore may not detect arrhythmias. The pulse oximeter should not be used as a replacement or substitute for ECG based arrhythmia analysis.
- Connecting equipment to the outlets on this device creates a medical electrical system and the user is responsible for continued compliance with the requirements of IEC 60601-1.
- Do not modify this equipment without proper authorization from International Biomedical.
- An Infant Transport Incubator should be used by appropriately trained personnel and under the direction of qualified medical staff familiar with currently known risks and benefits of Infant Transport Incubator use.
- When this incubator is operated on battery in low ambient temperatures, the thermal cover must be used.
- Skin temperature probe is not a rectal probe. The skin temperature sensor is not to be used as a rectal probe.
- Do not use liquids in or around the transport incubator.

CAUTIONS

- U. S. Federal and Canadian law restricts this device to sale by or on the order of a physician or other licensed medical practitioner. Outside Canada and the U. S., check with local laws for applicable restrictions.
- Use of sharp objects on Front Display Panel will cause permanent damage and will void warranty.
- Do not touch, press, or rub the display panels with abrasive cleaning compounds, instruments, brushes, rough-surface materials, or bring them into contact with anything that could scratch the panel.
- Use an oxygen analyzer when oxygen is delivered to the infant.
- The incubator electronics contain static sensitive components that can be damaged by improper handling. Use approved grounding techniques for work areas and service personnel.
- The infant tray grounding tabs are sharp; use care when cleaning air flow system.

- Do not move the incubator by pushing on the infant chamber. The infant chamber is not designed to sustain the forces to push the incubator. Stress fractures in the infant chamber can occur.
- DO NOT leave the 12 volt cord attached to the DC connector of the incubator.
- Do not overtighten the infant chamber screws. Do not strip the aluminum into which these screws are threaded.
- Do not drip cleaning solution through the holes where the swell latches fit into the air flow assembly.
- The incubator MUST be plugged into AC power and the battery recharged after any battery usage. The battery will sustain damage if drained of power and not placed on recharge soon.
- CLEANING AND CARE: Do not autoclave, pressure sterilize, or gas sterilize the incubator, cables, or sensors. Use cleaning solutions sparingly as excessive solution can flow into the incubator and cause damage to internal components. Do not soak or immerse the incubator or sensors in any liquid. Do not use petroleum-based, alcohol, acetone, or other harsh solvents. See cleaning instructions of reusable sensors and cables in directions for their use.
- Check alarm limits each time the system is used to ensure that they are appropriate for the patient being monitored.
- Use only parts, accessories, transducers, and cables designated by International Biomedical for use with the transport incubator. Cables and accessories other than those supplied by International Biomedical may result in unacceptable operation of the transport incubator and will void the equipment warranty.
- If a sensor or cable is damaged in any way, discontinue use immediately.
- The Maxtec MAX-250E oxygen sensor is a sealed device containing a mild acid electrolyte, lead (Pb), and lead acetate. Lead and lead acetate are hazardous waste constituents and should be disposed of properly, or returned to Maxtec or International Biomedical for proper disposal or recovery.
- Pulse oximeter probes and cables are designed for use with specific monitors. Only use Masimo sensors and patient cables for Masimo pulse oximetry model. Only use Nellcor sensors and patient cables for Nellcor pulse oximetry model. Verify the compatibility of the monitor, sensor, and cable before use, otherwise patient injury can result.

- Only use International Biomedical cable and Maxtec sensor for oxygen monitoring.
- Calibrate the oxygen sensor daily when in use or if environmental conditions change significantly (i.e., Temperature, Humidity or Barometric Pressure).
- Dropping or severely jarring the oxygen sensor after calibration may shift the calibration point enough to require recalibration.
- Oxygen sensor and pulse oximetry cables must be contained within cart or otherwise secured when not in use.

SECTION 1: GENERAL INFORMATION

SYMBOLS

The following symbols appear in the incubator documentation and labels. These internationally recognized symbols are defined by the International Electrotechnical Commission and International Organization of Standardization, IEC 417A, IEC 878, and ISO 7000.

	Keep away from rain
	On (power: connection to the mains)
	Off (Standby)
(Blue Background)	Attention, consult accompanying documents
	Alternating Current
	Direct Current
	Protective earth (ground)
	Type B equipment (EN60601-1)
	Type BF equipment (EN60601-1)
	Recycle or dispose of properly, contains sealed lead batteries

SYMBOL	MANUAL REFERENCE	EXPLANATION
	ALARM	Designates location of alarms on front panel
°C	HIGH TEMP	High temperature alarm indicator
SYS	SYS FAIL	System failure alarm indicator
	AIR FLO	Air flow blockage alarm indicator
SENS	SENS FAIL	Primary temperature sensor malfunction alarm indicator
	PWR FAIL	Incubator not connected to AC nor DC, and battery power is below 10.1 volts
	MUTE	Mute button silences audible alarms for approximately 1 minute
°C	BABY TEMP	Baby probe temperature mode
	BAT CHG	Battery charging indicator
	AC OP	Incubator connected to AC power
	DC OP	Incubator connected to DC power
	BAT OP	Incubator operating on internal battery due to no external power connected
	LOW BAT	Low battery indicator

MODEL A750i UNPACKING AND ASSEMBLY

The incubator is packed in three boxes: 1) infant chamber, 2) incubator, and 3) incubator cart. Additional boxes may be required if the incubator was purchased with accessory equipment. Upon arrival, inspect all boxes for any damage.

1. Open the largest box (approximately 38” × 25” × 30”, marked with part number 222-7313) and remove the cart (see Figure 2 - 1).

Figure 2 - 1 Assembled A750i with PulseOx

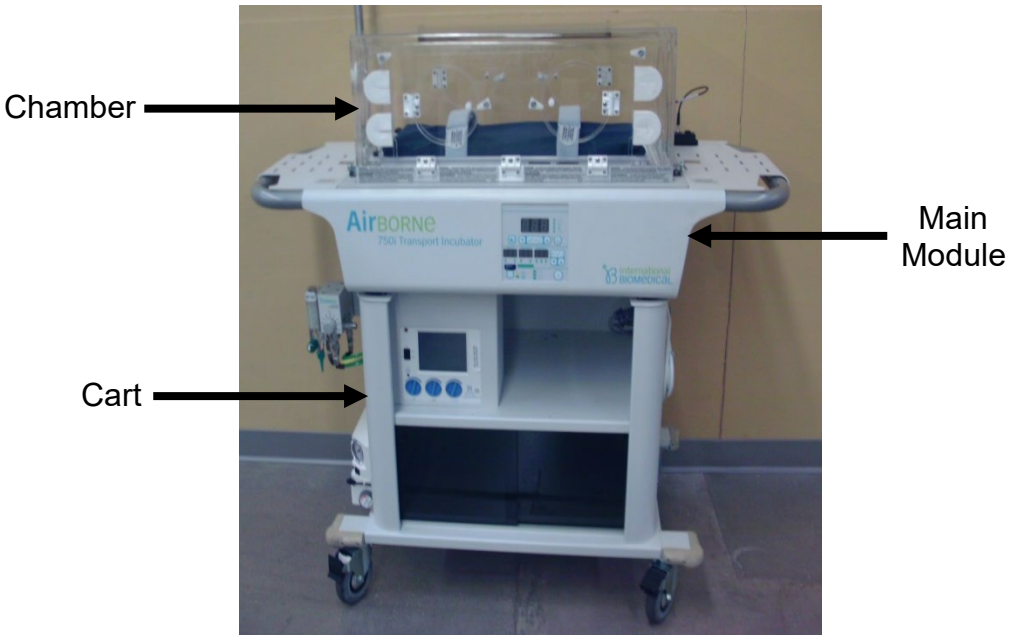

2. Locate the four mounting screws on the four corners of the cart and set aside until the main module has been unpacked. The four mounting screws (see Figure 2 - 2) are generally packed in the mounting holes, but they must be removed to mount the main module.

Figure 2 - 2 Mounting Hardware Location

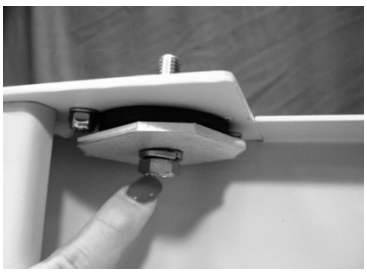

WARNING: **When the incubator is attached to a Ferno 146 Collapsible Cart, the two highest positions should not be used as they can cause a tip hazard.**

3. Open the box for the main module (approximately 42” × 27” × 16”, marked with part number 222-7310) and removed the 2 top pieces of foam. In addition to the incubator main module, the handles, manuals, skin temperature probe, positioning straps, light system, and IV pole are generally packed in this box.

   a. Remove the main module (Figure 2 - 1) and set it on top of the cart (Figure 2 - 1).

   b. Align the four mounting holes on the bottom of the main module with the four mounting plates on the cart and insert the mounting screws from underneath the main module (see Figure 2 - 3).

Figure 2 - 3 Securing Main Module to Cart

   c. Tighten mounting hardware for a secure fit. Once the main module is securely fastened to the cart, locate the two incubator handles and attach them to the main module using an appropriately sized Allen wrench (see Figure 2 - 4).

Figure 2 - 4 Handle Assembly

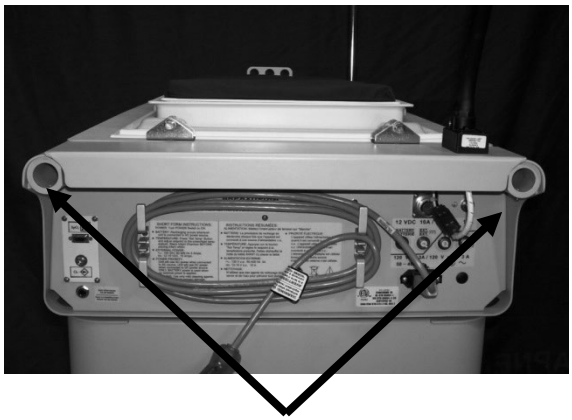

Handle holes

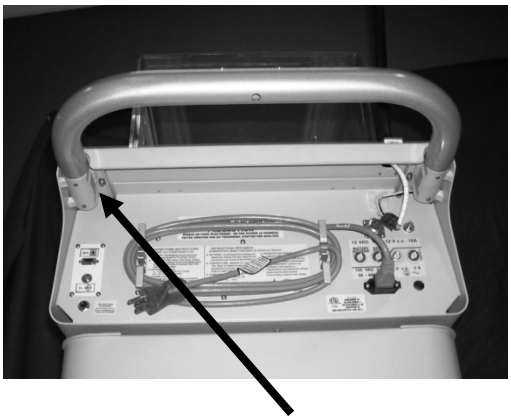

Handle mounting

NOTE: *When the incubator is attached to a rigid cart with an internal power strip, the power cord must be contained within the cart or secured on either end of the cart with the supplied cord holders when not in use.*

d. Loop the infant positioning straps through the slits in the side of the infant tray and Velcro into place. There will be four strap pieces, making two complete belts (see Figure 2 - 5).

Figure 2 - 5 Infant Positioning Strap Mounting

e. Open the final box (approximately 34” × 21” × 17”, marked with part number 222-7312) and remove the inner, Plexiglas infant chamber and place on top of the main module, carefully fitting it into the gasket material. The large opening on the front of the chamber should be placed facing the front of the incubator, with the cut out for the head door on the left (other hand port / door configurations are available so there may be additional cut outs).

f. Remove the outer, Plexiglas infant chamber from the box and place over the inner chamber on the incubator. The large door with hand ports should be facing the front of the incubator with the head door on the left. (Other hand port / door configurations are available so there may be additional doors and/or hand ports.)

g. Secure both chambers to the incubator by inserting the four push/pull pins located at both ends of the main module surface (see Figure 2 - 6). Adjust the chambers until the pins are easily inserted.

Figure 2 - 6 Chamber and Lamp Mounting

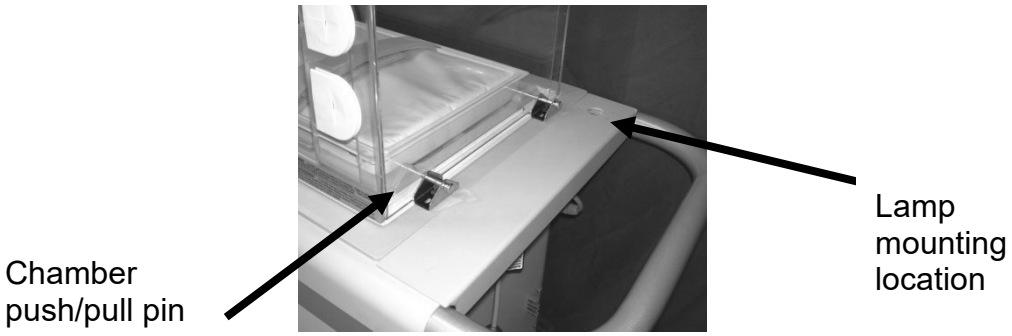

h. Locate the lamp. The opening for the lamp wiring is located on the top right back corner of the main module, just behind the infant chamber (see Figure 2 - 6). Insert the wiring through the opening and connect the two electrical adapters. The lamp mounting hardware will be attached to the lamp wiring that is part of the main module, just below the electrical adapter.

i. Once operation of the lamp is confirmed, use the four mounting screws to attach the lamp to the main module. Mount so the on/off power switch will be readily accessible from the end of the incubator.

NOTE: *The incubator power switch must be turned on to operate the lamp.*

j. Locate the IV pole and insert it into the IV pole holder located on the top left back corner of the main module.

ASSEMBLY OF THE AIRWAY MANAGEMENT SYSTEM (OPTIONAL)

If the Airway Management option was ordered, the A750i cart will come equipped with additional accessories (see Figure 2 - 7). The additional equipment will be included in the incubator cart box.

Figure 2 - 7 A750i with PulseOx and Airway Management Option

1. After unpacking and assembling the incubator, locate the air/oxygen blender and flowmeter assembly. Attach the blender/flowmeter assembly to the left hand side of the cart using the hardware on the bracket (see Figure 2 - 8).

Figure 2 - 8 Securing Blender / Flowmeter

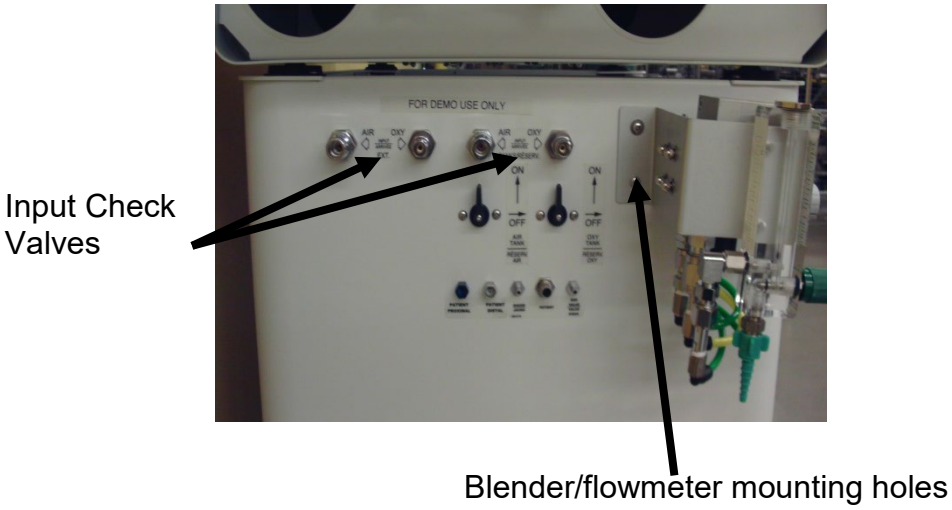

2. Attach the green oxygen hose and the yellow air hose to the bottom of the blender. Ensure connections are snug.

3. To verify proper connection, attach the air and oxygen coiled hoses to the top set of input check valves (marked “external”) and connect the other end of the hoses to the hospital air/oxygen supply. Turn the flowmeter knob to 16 and confirm that gas is coming out the bottom of the flowmeter. Remove the air and oxygen hoses from the top set of input check valves and place them on the bottom set of input check valves (marked “tanks”). Again, verify flow is coming out of the flowmeter with the gases turned on.

4. The Airway Management System contains the following additional accessories that are generally packed in the cart box as well:

   a. One air and one oxygen regulator

   b. One set of air and oxygen clear tubing hoses

   c. One set of air and oxygen coiled hoses

   d. Air and oxygen quick-connect connectors

INSTALLATION OF THE MVP-10 OR CROSSVENT 2i VENTILATOR (OPTIONAL)

If the Ventilator option was ordered, the A750i cart will come equipped with a ventilator installed inside of it. (See Figure 2 - 9.)

Figure 2 - 9 A750i with PulseOx with Airway Management, Suction, and Ventilator

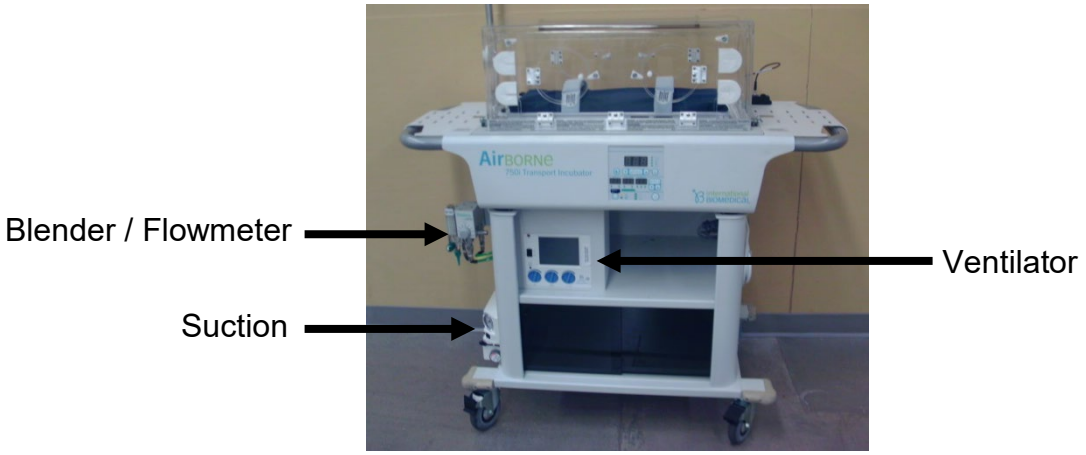

1. Ensure that the Airway Management system is installed correctly. Refer to SECTION 2, ASSEMBLY OF THE AIRWAY MANAGEMENT SYSTEM (OPTIONAL), for installation instructions.

2. Connected to the ventilator will be a green Y-hose with two unconnected oxygen hoses. Connect one hose to the bottom front connector on the blender and the other hose to the rear connector on the flowmeter. See Figure 2 - 10.

Figure 2 - 10 Ventilator Hose Configuration

3. If a Crossvent Ventilator was ordered, ensure it is plugged into the AC power strip on the A750i cart. Plug the cart power strip into AC power to charge the ventilator battery and allow AC operation.

4. To verify Crossvent 2i ventilator operation, refer to page 11 of the BioMed Devices Crossvent 2i+ Instruction and Service Manual that is provided.

5. To verify MVP-10 ventilator operation, refer to page 15 of the BioMed Devices MVP-10 Neonatal/Pediatric Ventilator Instruction Manual that is provided.

INSTALLATION OF THE SUCTION UNIT (OPTIONAL)

If the suction unit option was ordered, the main unit will already be installed on the left hand side of the A750i cart. Follow these instructions to complete installation.

1. Plug the power charger into the adapter on the front of the suction unit, just below the on/off switch (see Figure 2 - 11).

Figure 2 - 11 Installation of Suction Unit

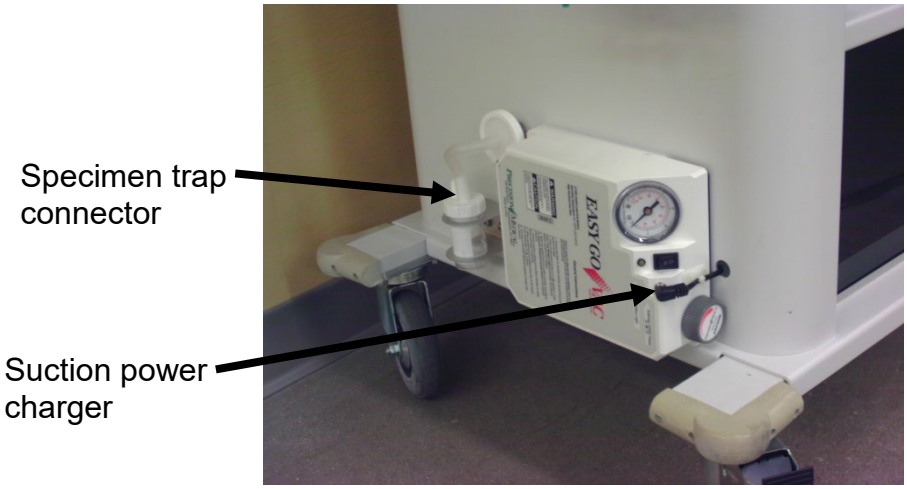

2. Unpack the provided specimen holder and slide it into the circular bracket located behind the blender. Plug the end of the specimen holder tubing into the white connector located toward the top of the cart. See Figure 2 - 11.

3. Verify that the suction pump is plugged into the AC power strip on the A750i cart. Plug the cart power strip into AC power to charge the suction battery and allow AC operation of the suction pump.

4. Refer to the included suction unit operator's manual for instructions for use and to verify functionality.

AIR AND OXYGEN TANKS

Air and oxygen tanks are shipped empty and must be filled before use. Attach regulators and check tank pressures. Secure the tanks to the incubator.

WARNING: **Air and oxygen tanks are pressurized and must be properly secured.**

WARNING: **USE OF OXYGEN INCREASES FIRE DANGER: Pressurized oxygen is flammable. Spark-producing auxiliary equipment should not be placed in the transport incubator.**

WARNING: **The use of oxygen may increase the noise level within the infant chamber.**

OPERATIONAL CHECK

The blender, flowmeter, ventilator, and monitor should be operated according to their respective instructions for use. Verify correct operation using both the supplied air and oxygen tanks and the hospital's air and oxygen supply.

In addition to these operational checks, refer to SECTION 6 for daily preventative maintenance that should be performed before the incubator is used.

SECTION 3: OPERATING INSTRUCTIONS

This section contains operating procedures for the incubator. The incubator should be operated with external power whenever possible. The incubator's battery should be fully charged prior to use by connecting the unit to an AC power supply for at least 8 hours. When not in use, the incubator should be plugged into an AC power source in order to recharge the battery. It is not recommended for the incubator to be on and heating when not in use as this will shorten the life of system components.

WARNING: **Avoid direct sunlight or radiant heat which can cause a dangerous increase in chamber air temperature.**

FRONT PANEL DISPLAY FEATURES

The incubator controls are located on a front display panel. Figure 3 - 1 shows a drawing of the membrane panel and highlights important features. A description of each of the features follows.

CAUTION: Use of sharp objects on Front Display Panel will cause permanent damage and will void warranty.

CAUTION: Do not touch, press, or rub the display panels with abrasive cleaning compounds, instruments, brushes, rough-surface materials, or bring them into contact with anything that could scratch the panel.

Figure 3 - 1 Front Display Panel

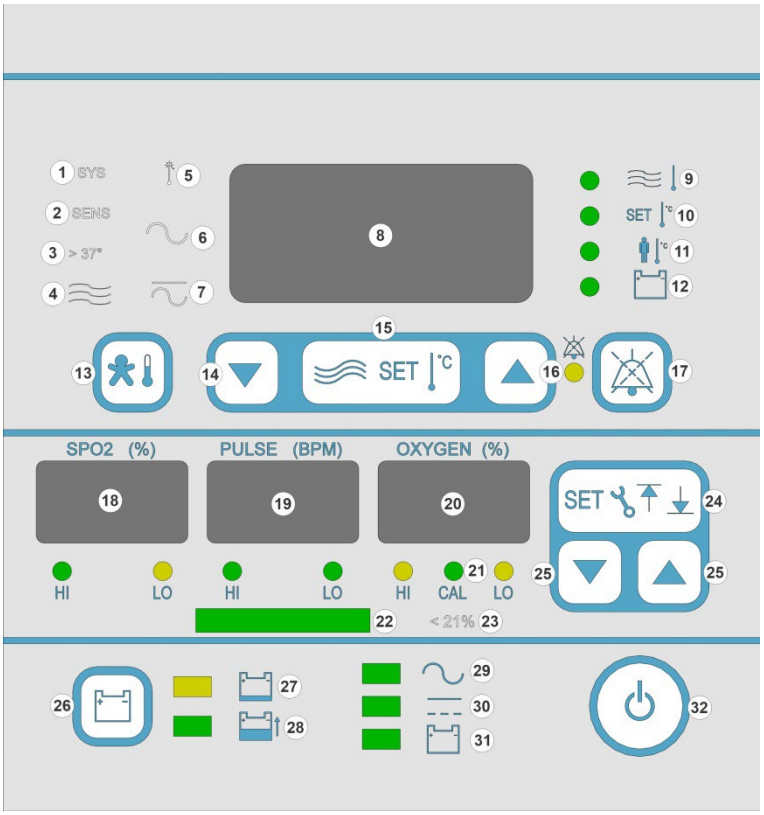

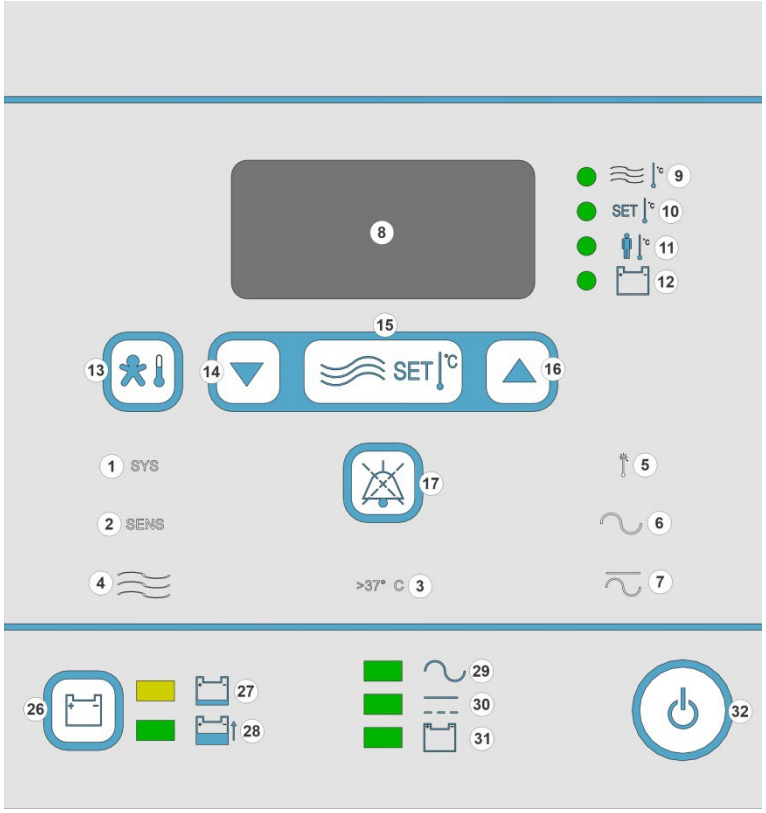

1. System Fail Alarm Indicator (***SYS FAIL***)
2. Sensor Fail Alarm Indicator (***SENS FAIL***)
3. Air Temperature Setpoint >37° C Indicator
4. Air Flow Alarm Indicator (***AIR FLO***)
5. High Temperature Indicator (***HIGH TEMP***)
6. AC Fail Indicator
7. Power Fail Indicator (***PWR FAIL***)
8. Main Display Screen
9. Air Temperature Display Indicator
10. Set Air Temperature Indicator
11. Baby Temperature Display Indicator
12. Battery Life Display Indicator
13. Baby Temp. Display Button (***BABY TEMP***)
14. Set Air Temperature Down Button
15. Set Air Temperature Button
16. Set Air Temperature Up Button
17. Mute Button and Indicator (***MUTE***)

* 18. Oxygen Saturation Display Screen
* 19. Pulse Rate Display Screen
* 20. Oxygen Display Screen
* 21. Oxygen Sensor Cal. Indicator
* 22. Pulse Strength Indicator
* 23. Oxygen Setpoint Low Indicator
* 24. PulseOx SET Button
* 25. PulseOx Up / Down Arrows

26. Battery Life Display Button
27. Low Battery Indicator (*LOW BAT*)
28. Batt. Charging Indicator (*BAT CHG*)
29. AC Power Indicator (*AC OP*)
30. DC Power Indicator (*DC OP*)
31. Battery Power Indicator (*BAT OP*)
32. Power Button

* ***NOTE:*** *Items 18 - 25 are features exclusive to the PulseOx version of the incubator.*

1: System Fail Alarm Indicator (SYS FAIL)

Yellow LED indicator that illuminates when the displayed temperature exceeds 39.0° C

2: Sensor Fail Alarm Indicator (SENS FAIL)

Yellow LED indicator that illuminates when the temperature being sensed by the primary temperature sensor is outside the normal temperature range of the incubator (10 - 45° C)

3: Air Temperature Setpoint > 37° C Indicator

Yellow LED that illuminates when the chamber air temperature setpoint is set above 37° C

4: Air Flow Alarm Indicator (AIR FLO)

Yellow LED indicator that illuminates when the air flow is blocked

5: High Temperature Alarm Indicator (HIGH TEMP)

Yellow LED indicator that illuminates when the displayed temperature exceeds 38.5° C

6: AC Fail Indicator

Yellow LED indicator that illuminates when the incubator is unplugged from an AC power source

7: Power Fail Indicator (PWR FAIL)

Yellow LED indicator that illuminates when the incubator is unplugged from AC and DC power and the internal battery voltage falls below 10.1 volts

8: Main Display Screen

Seven segment digital display that displays chamber air temperature, baby temperature, battery life status, and HI or LO temperature alarms

9: Air Temperature Display Indicator

Indicator is illuminated when the Main Display Screen displays the current air temperature in the infant chamber.

10: Set Air Temperature Indicator

Indicator is illuminated when the user is adjusting the infant chamber air temperature set point.

11: Baby Temperature Display Indicator

Indicator is illuminated when the ***BABY TEMP*** button is pressed and held.

12: Battery Life Display Indicator

Indicator is illuminated when the Battery Life Display button is pressed and held.

13: Baby Temperature Button (BABY TEMP)

When button is pressed, the Main Display Screen will display the temperature measured by the baby temperature probe.

14: Set Air Temperature Down Button

Button will decrease the setpoint temperature in 0.1° C increments.

15: Set Air Temperature Button

When button is pressed, the infant chamber air temperature can be adjusted.

16: Set Air Temperature Up Button

Button will increase the setpoint temperature in 0.1° C increments.

17: Mute Button (MUTE)

Button is used to silence audible alarms for approximately one minute. The warning LED to the left of the Mute Button will be illuminated for the duration of the mute cycle.

NOTE: *The LED is only available with the PulseOx version of the incubator.*

18: Oxygen Saturation Display Screen (Optional Feature)

Screen displays functional oxygen saturation (units: percent).

19: Pulse Rate Display Screen (Optional Feature)

Screen displays pulse rate (units: beats per minute).

20: Oxygen Display Screen (Optional Feature)

Screen displays the oxygen concentration (units: percent).

21: Oxygen Sensor Cal. Indicator (Optional Feature)

Indicator is illuminated when the user is calibrating the oxygen sensor.

22: Pulse Strength Indicator (Optional Feature)

Bar graph will illuminate at the rate shown on the Pulse Rate Display Screen with a calculated intensity.

23: Oxygen Setpoint Low Indicator (Optional Feature)

Indicator is illuminated when the oxygen concentration lower alarm limit is set to a value below 21%.

24: PulseOx SET Button (Optional Feature)

Button used to enter modes to set pulse oximetry and oxygen monitor alarm limits and to calibrate the oxygen sensor

25: PulseOx Up and Down Arrows (Optional Feature)

Buttons used to set pulse oximetry and oxygen monitoring variables

26: Battery Life Display Button

Button used to display the status of the battery on the Main Display Screen

27: Low Battery Indicator (LOW BAT)

Yellow LED indicator that illuminates when the battery voltage is less than 11 volts

28: Battery Charging Indicator (BAT CHG)

Green LED indicator that illuminates when the battery is actively being charged

29: AC Power Indicator (AC OP)

Green LED indicator that illuminates when the incubator is on and connected to external AC power

30: DC Power Indicator (DC OP)

Green LED indicator that illuminates when the incubator is on and connected to external DC power

31: Battery Power Indicator (BAT OP)

Green LED indicator that illuminates when the incubator is on and no external power is applied, indicating the unit is operating off of internal battery power

32: Power Button

Button is used to turn the incubator on and off. When turned on, it enables the temperature display, pulse oximetry and oxygen monitor displays, alarms, and infant chamber air temperature control.

SIDE PANEL FEATURES

The side panel of the incubator is where the power cords, sensors, and probes connect, and where circuit breakers are located. Figure 3 - 2 shows a drawing of the side panel and highlights important features. A description of each of the features follows.

Figure 3 - 2 Side Panel

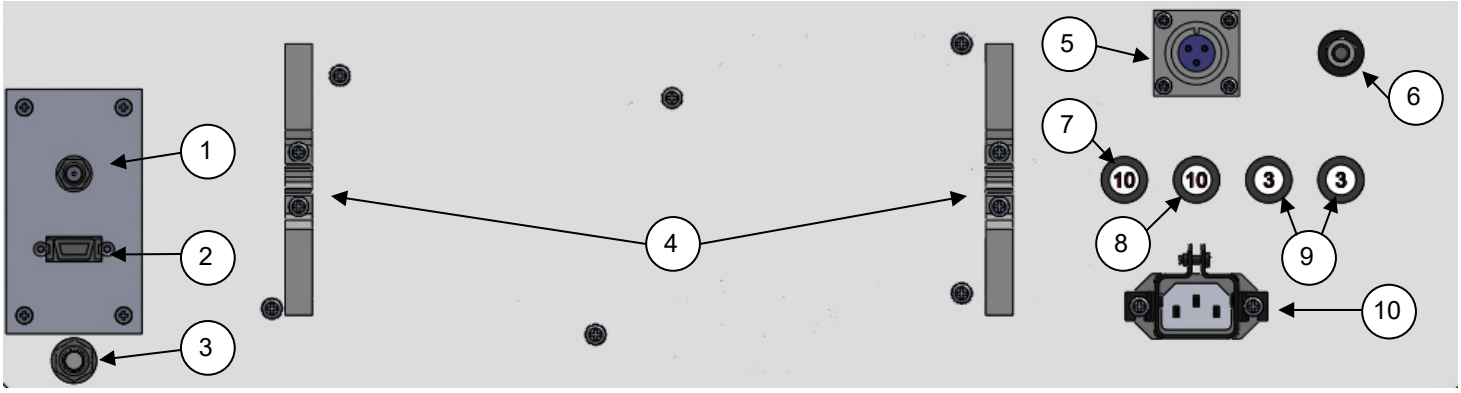

* 1. Oxygen Sensor Connector
* 2. Pulse Oximeter Sensor Connector
3. Baby Temperature Cable Connector
4. Power Cord Holder
5. DC Power Cord Connector
6. Potential Equalization Stud
7. Battery Circuit Breaker
8. External Circuit Breaker
9. AC Circuit Breakers
10. AC Power Cord Connector

* ***NOTE:*** *Items 1 & 2 are features exclusive to the PulseOx version of the incubator.*

1: Oxygen Sensor Connector (Optional Feature)

Connection point for the oxygen sensor cable

2: Pulse Oximeter Sensor Connector (Optional Feature)

Connection point for the pulse oximeter sensor cable (Masimo or Nellcor)

3: Baby Temperature Cable Connector

Connection point for the baby temperature probe cable

4: Power Cord Holder

When not in use, power cord to be wrapped around these holders

5: DC Power Cord Connector

Connection point for the DC power cord

The individual conductors are labeled A (not used), B (negative), and C (positive).

6: Potential Equalization Stud

This stud is used for potential equalization.

7: Battery Circuit Breaker

10 Amp circuit breaker connected to the battery circuit

8: External Circuit Breaker

10 Amp circuit breaker connected to the external DC input circuit

9: AC Circuit Breakers

3 Amp circuit breakers connected to the AC input circuit

10: AC Power Cord Connector

Connection point for the AC power cord

POWER FEATURES

The incubator can be operated in one of three power modes: external AC power, external DC power, or internal battery power.

AC Power Mode

AC power can be supplied using either 120 V or 230 V external AC power, depending on the incubator configuration. When operating in AC power mode, the ***AC OP*** indicator (Figure 3 - 1, item 29) will be illuminated. AC power has priority over all other power sources, external or internal. AC power should be used for warming the incubator in preparation for transport and also to recharge the battery.

WARNING: **ENSURE UNIT IS PROPERLY GROUNDED: To ensure grounding reliability, only connect the power cord to properly grounded, 3-wire hospital grade outlet of the proper voltage and frequency. DO NOT USE EXTENSION CORDS. If the integrity of the available external power sources is in doubt, the incubator should be operated from its internal battery.**

DC Power Mode

DC power can be supplied using a 12 V power source. When operating in DC power mode, the ***DC OP*** indicator (Figure 3 - 1, item 30) will be illuminated. External DC power is supplied through a 3 conductor circular connector located on the back of the incubator (Figure 3 - 2, item 5). DC power has priority over internal battery power. While operating in DC power mode, the battery will not be charged.

Battery Power Mode

Battery power will automatically be selected when neither AC power nor DC power are available. When operating on internal battery, the ***BAT OP*** indicator (Figure 3 - 1, item 31) will be illuminated. Connecting AC or DC power will supersede battery power operation. The battery charger operates continually when the incubator is connected to an AC power source. When charging, the green ***BAT CHG*** indicator (Figure 3 - 1, item 28) will be illuminated. The rate at which the battery charges decreases when the incubator is powered on. A significantly low AC line voltage will also decrease the rate of battery charge. It takes approximately 8 hours to fully charge a completely discharged standard 26 ampere-hour battery when the incubator is supplied AC power and is powered down. If the incubator is on and warming up, the battery charge time is two to three times longer. The incubator will maintain an infant chamber temperature of 37° C for three hours on a fully charged battery with an ambient temperature of 20° C.

NOTE: *When not in use, the incubator should be plugged into an AC source to recharge the battery. See SECTION 6 on BATTERY CARE.*

To determine how much battery life is left, the Battery Life Display Button (Figure 3 - 1, item 26) can be pressed to display the status of the battery on the Main Display Screen (Figure 3 - 1, item 8). In this mode, the Battery Life Display Indicator (Figure 3 - 1, item 12) will be illuminated. When operating on AC power, the Main Display Screen will indicate the state of charge of the battery as an estimated percentage (to the nearest 20%). A fully charged battery will display 100% and a battery which has almost reached its safe discharge level will display 0%. When the incubator is operating from battery power or external DC power, the Main Display Screen will indicate the battery voltage (to the nearest 0.3 volt). Regardless of the power source, error code E03 will be reported if the battery voltage is outside of the 9.0 volt to 14.5 volt range. To continue normal operation, the battery voltage must be above 10 ± 0.3 volts.

For general operation, the use of external AC or DC power is *HIGHLY RECOMMENDED*. The internal battery should be used only when the incubator has no other energy source available.

Power Interruption / Failure

If external AC or DC power is lost while the incubator is powered on, the incubator will automatically switch over to battery power with no interruption in incubator performance or degradation of pulse oximeter and/or oxygen monitor accuracy. In the event of total power loss, all user-programmed settings (e.g. temperature setpoint, alarm limits) will default to the most recently programmed values.

POWERING UP THE INCUBATOR

To turn the incubator on, press the Power Button (Figure 3 - 1, item 32) on the lower right hand corner of the Front Display Panel. When the incubator is turned on, all functional LEDs on the display panel will illuminate and the audible alarm will sound. This Power-up Indicator Test will last approximately two seconds after which the Main Display Screen will display the infant chamber air temperature set point. The PulseOx Display screen will alternately display the HI/LO alarm settings for 16 seconds. To interrupt the PulseOx display, press the PulseOx settings button. After the initial start-up, the PulseOx display will be in the “Off” status. After 5 seconds, if no buttons have been pressed, the display will change and show the actual measured infant chamber air temperature. The incubator will immediately attempt to regulate the infant chamber air temperature to the last set point stored in memory (refer to SECTION 3, SETTING THE INFANT CHAMBER AIR TEMPERATURE, for instructions on setting the temperature).

One of three power source indicators will be illuminated, indicating which source is currently powering the incubator.

- AC power indicator (Figure 3 - 1, item 29)
- External DC power indicator (Figure 3 - 1, item 30)
- Internal battery power indicator (Figure 3 - 1, item 31)

POWERING OFF THE INCUBATOR

To turn the incubator off, press the Power Button (Figure 3 - 1, item 32) on the lower right hand corner of the Front Display Panel. The Power Button provides the means of electrically isolating the incubator circuits from supply mains simultaneously on all poles.

DISPLAY MODES

The incubator has the ability to display both infant chamber air temperature and infant temperature. When the incubator is initially powered on, the Main Display Screen (Figure 3 - 1, item 8) displays the setpoint temperature for a few seconds and then defaults to displaying the current air temperature in the infant chamber. In this mode, the Air Temperature Display Indicator (Figure 3 - 1, item 9) is illuminated. To display the infant temperature, the ***BABY TEMP*** button (Figure 3 - 1, item 13) can be pressed. In this mode, the Baby Temperature Display Indicator (Figure 3 - 1, item 11) illuminates and the infant temperature is displayed on the Main Display Screen. When the button is released, the display reverts back to infant chamber air temperature.

TEMPERATURE CONTROL

The infant chamber air temperature can be controlled from the front display panel on the incubator. When the Set Air Temperature Button (Figure 3 - 1, item 15) is pressed, the user can use the up and down arrows (Figure 3 - 1, items 14 & 16) to adjust the temperature setpoint (in 0.1° C increments). When in this mode, the Set Air Temperature Indicator (Figure 3 - 1, item 10) will be illuminated. To maximize heating efficiency, the incubator should be connected to AC power while heating to desired setpoint. Running the incubator on its internal battery will drastically increase the required time to reach the desired temperature setpoint. The baby temperature cannot be controlled but can be displayed on the Main Display Screen by pressing the ***BABY TEMP*** button (Figure 3 - 1, item 13).

SETTING THE INFANT CHAMBER AIR TEMPERATURE

To adjust the infant chamber air temperature set point:

1. Turn on the incubator using the Power Button (Figure 3 - 1, item 32).
2. After the Power-up Indicator Test is complete, press the Set Temperature Button (Figure 3 - 1, item 15).
3. Use the Set Temperature Up and Down Arrow Buttons (Figure 3 - 1, items 14 and 16) to adjust the temperature setting to the desired value. The temperature can be adjusted from 17.0° C to 38.9° C in 0.1° C increments.
4. When the desired value is set, either press the Set Temperature Button again or wait 5 seconds, after which time the Main Display Screen will return to displaying the measured infant chamber air temperature.

PULSE OXIMETER AND OXYGEN MONITOR CONTROL (OPTIONAL FEATURE)

The incubator is calibrated to display functional oxygen saturation (Figure 3 - 1, item 18), pulse rate (Figure 3 - 1, item 19) and oxygen concentration (Figure 3 - 1, item 20). In addition to these numerical displays, the pulse rate is also displayed on a pulse strength bar graph (Figure 3 - 1, item 22). The PulseOx SET button (Figure 3 - 1, item 24) and up and down arrows (Figure 3 - 1, item 25) can be used to turn the pulse oximeter and/or oxygen monitor on and off. These buttons can also be used to set high and low alarm limits for each variable. When these buttons are used to reach the oxygen sensor calibration mode, the Oxygen Sensor Cal. Indicator (Figure 3 - 1, item 21) will be illuminated. Refer to SECTION 4 and SECTION 5 for more information on using the pulse oximeter and oxygen monitor features of this incubator.

ALARMS / INDICATORS

The incubator utilizes a visual and audible alarm system. Audible alarms can be silenced for approximately one minute using the ***MUTE*** button (Figure 3 - 1, item 17). The audible alarm will sound at 65 dB at a distance of 3 m from the operator interface of the incubator.

WARNING: **If an alarm condition (other than the exceptions listed herein) occurs while the MUTE button is activated, only visual indicators will be activated.**

Standard System Alarms

Alarm	Priority
System Fail Alarm	LOW
Sensor Fail Alarm	LOW
Air Temperature Setpoint >37°C	LOW
Air Flow Alarm Indicator	LOW
High Temperature Indicator	LOW
AC Fail Indicator	LOW
Power Fail Indicator	LOW

SpO_2 Alarms (Optional Feature)

SpO_2 % HIGH	LOW
SpO_2 % LOW	MEDIUM
PULSE RATE HIGH	LOW
PULSE RATE LOW	LOW
O_2 % HIGH	MEDIUM
O_2 % LOW	MEDIUM
SPO_2 DATA PERIOD	LOW

Alarms are indicated by a continuous beep to alert operator to inspect the device to determine the cause of the alarm.

The SpO_2 % LOW, O_2 % HIGH, and O_2 % LOW alarms are indicated by a series of 3 beeps followed by a slight pause, and then repeated. This is to alert the operator to these specific alarms and their Medium Priority.

Power Alarms

When the incubator becomes disconnected from AC power, the AC Fail indicator (Figure 3 - 1, item 6) illuminates and an audible alarm will sound. When the incubator becomes disconnected from both AC and DC power and the internal battery voltage falls below 10.1 volts, the ***PWR FAIL*** indicator (Figure 3 - 1, item 7) illuminates and a continuous audible alarm sounds. Power to maintain the temperature in the infant chamber, and the accuracy of the O_2 and the SpO_2 monitors (if equipped), is no longer available and all power to the incubator (other than to power the ***PWR FAIL*** indicator and the audible alarm) is disabled. The indicator illuminates as long as the incubator remains on. Pressing the ***MUTE*** button will not silence the audible alarm. The Power Button should be pressed to turn the incubator off, silencing the audible alarm, and the incubator should be connected to AC power to allow the battery to recharge.

In units with the Optional SpO_2 feature, the Power Fail alarm is a Medium Priority Technical Alarm.

Temperature Alarms

When the measured air temperature is more than 1° C from the user-configured set point, an intermittent audible alarm will sound every minute and the Main Display Screen will flash ***HI*** or ***LO*** every 5 seconds until the incubator temperature is back to within 1° C of the set point.

When the measured air temperature exceeds 38.5° C, the ***HIGH TEMP*** alarm indicator (Figure 3 - 1, item 5) illuminates and an intermittent audible alarm turns on. The incubator is still fully operational and the operator, at his/her discretion, may ignore this alarm.

When the measured air temperature exceeds 39.0° C, the ***HIGH TEMP*** alarm indicator, the ***SYS FAIL*** alarm indicator (Figure 3 - 1, item 1), and a continuous audible alarm turn on. The incubator's heater is disabled and the incubator must cool to below 39° C before the heater is re-enabled.

When the measured air temperature exceeds 39.2° C, the ***SYS FAIL*** alarm indicator and a continuous audible alarm turn on. The incubator's heater is disabled until the infant chamber temperature is lowered, at which point the incubator must be turned off and then on again to reset the alarm.

The ***SENS FAIL*** indicator (Figure 3 - 1, item 2), coupled with a continuous audible alarm, indicates the temperature being sensed by the primary temperature sensor is well outside the normal temperature range of the incubator (10 - 45° C). The activation of this alarm may indicate a problem with the temperature sensor or the control circuitry, in which case, the incubator needs to be serviced by qualified personnel.

If the primary temperature sensor is shorted or indicates an extremely high temperature, the ***SENS FAIL***, ***HIGH TEMP***, and ***SYS FAIL*** indicators and alarms will all be activated and the incubator's heater will be disabled.

If the primary temperature sensor is open or indicates an extremely low temperature, the ***SENS FAIL*** and ***SYS FAIL*** alarms will be activated, and the heater will be disabled.

If the user specifies a chamber set point temperature greater than 37° C, the Air Temperature Setpoint > 37° C Indicator (Figure 3 - 1, item 3) will illuminate.

Pulse Oximeter and Oxygen Monitor Alarms (Optional Feature)

Below each of the pulse oximeter and oxygen monitor screens are two LEDs, labeled HI and LO. When any of the three displayed values (oxygen saturation, pulse rate, or oxygen concentration) exceed the user-programmed high alarm limit, the corresponding HI LED illuminates and an audible alarm will sound. When any of the three displayed values goes below the user-programmed low alarm limit, the corresponding LO LED illuminates and an audible alarm will sound.

When calibrating the oxygen monitor, if the low oxygen alarm limit is programmed below 21%, the Oxygen Setpoint Low Indicator (Figure 3 - 1, item 23) is illuminated.

Other Alarms

When the airflow through the infant chamber is reduced due to an obstruction, such as a blanket, the ***AIR FLO*** alarm indicator (Figure 3 - 1, item 4) illuminates and a continuous audible alarm turns on. Due to reduced airflow, the incubator's heater's temperature will exceed a preset threshold and will be disabled. After the airflow obstruction is removed and the heating element is allowed to cool, the heater system will return to normal operation.

NOTE: *A blanket should always be used inside the infant chamber between the infant and the mattress.*

When the battery voltage drops below 11 volts, the ***LOW BAT*** indicator (Figure 3 - 1, item 27) illuminates and an intermittent audible alarm turns on. The battery will be able to supply the heater requirements for only a few minutes after this alarm occurs. The ***LOW BAT*** alarm cannot be reset. The incubator must be connected to AC power to allow the battery to recharge when this alarm occurs.

NOTE: *When this alarm activates, the incubator has approximately fifteen (15) minutes of operational power remaining. This estimate is for a good battery and an ambient temperature of 20° C.*

EXTERNAL LIGHTING

The incubator is equipped with an external examination light. This light can be activated only when the incubator is turned on.

The light is intended to be used as an external light source. Do not place the light into the inner infant chamber.

WARNING: **Do not change the lamp and touch the patient simultaneously.**

WARNING: **EXPLOSION HAZARD: Do not use the examination light, the pulse oximeter, or oxygen monitor in the presence of flammable anesthetics or other flammable gases.**

WARNING: **Avoid eye exposure. Direct light exposure may cause eye damage. Infants must wear eye protection.**

SKIN TEMPERATURE PROBE

The Measurement Specialties 409B Reusable Skin Temperature Probe is to be used to monitor the surface temperature of the infant. Select appropriate site for monitoring according to currently accepted medical practices.

WARNING: **The skin temperature sensor is not a rectal probe. The skin temperature sensor is not to be used as a rectal probe.**

SECTION 4: PULSE OXIMETRY (OPTIONAL FEATURE)

This section contains information regarding the pulse oximetry feature of the incubator. Principles of operation, set-up instructions, and sensor options are detailed.

PULSE OXIMETER PRINCIPLES OF OPERATION

Pulse oximetry is based on several key principles:

- the absorption of red and infrared light (spectrophotometry) by oxyhemoglobin and deoxyhemoglobin
- the change in volume of arterial blood in tissue (and hence, light absorption by blood) due to changes in pulse (plethysmography)
- the fluctuating absorbance of venous blood during arteriovenous shunting contributes to noise during the pulse

Because oxyhemoglobin and deoxyhemoglobin differ in light absorption, the amount of red and infrared light absorbed by the blood is related to hemoglobin oxygen saturation. The pulse oximeters supported by the incubator, Masimo SET® and Nellcor OxiMax, decompose the red and infrared pulsatile absorbance signals into an arterial signal plus a noise component and calculate the ratio of arterial signals. The ratio of the two arterial pulse-added absorbance signals is used to find the oxygen saturation in an empirically derived equation in the pulse oximeter software.

Different pulse oximetry sensors can be used with the system. The user should consult the sensor's instructions for use to ensure the appropriate sensor is being used. In addition, only Masimo sensors should be used with the Masimo pulse oximeter and only Nellcor sensors should be used with the Nellcor pulse oximeter. Sensor accuracy data, found in SECTION 11 (PULSE OXIMETER SPECIFICATIONS (OPTIONAL FEATURE)), are based on human blood studies in which the values obtained for healthy adult volunteers in induced hypoxia states during motion and non-motion conditions were compared to a laboratory co-oximeter.

Erroneous SpO_2 readings may be caused by several reasons including, but not limited to, the following:

- Interfering substances such as Carboxyhemoglobin and Methemoglobin (i.e. an increase in SpO_2 approximately equal to the amount of carboxyhemoglobin present)
- Dyes, or any substance containing dyes, that change usual blood pigmentation

- Severe anemia
- Excessive patient movement
- Venous pulsations
- Placement of a sensor on an extremity with a blood pressure cuff, arterial catheter, or intravascular line
- Use during defibrillation (temporary)

WARNING: **Do not use the pulse oximeter or oximetry sensors during magnetic resonance imaging (MRI) scanning. Induced current could potentially cause burns. The pulse oximeter may affect the MRI image and the MRI unit may affect the accuracy of the oximetry results.**

WARNING: **The pulse oximeter should NOT be used as an apnea monitor.**

NOTE: *The pulse oximeter should be considered an early warning device. As a trend towards patient hypoxemia is indicated, blood samples should be analyzed by a laboratory co-oximeter to completely understand the patient's condition.*

Pulse rate measurement is based on the optical detection of a peripheral flow pulse and therefore may not detect arrhythmias. The pulse oximeter should not be used as a replacement or substitute for ECG-based arrhythmia analysis.

NOTE: *Loss of pulse signal can occur for many reasons including, but not limited to, when the patient has hypotension, severe vasoconstriction, severe anemia, or hypothermia; there is arterial occlusion proximal to the sensor; or the patient is in cardiac arrest or is in shock.*

SECTION 4: PULSE OXIMETRY (OPTIONAL FEATURE)

PULSE OXIMETER SET-UP INSTRUCTIONS

The following steps will instruct the user how to initially set up the pulse oximeter and program low and high alarm settings for SpO_2 and pulse rate. Additionally, when using the Masimo pulse oximeter, the user can also set the algorithm mode, set the averaging mode, and view the oxygen perfusion index.

CAUTION: Check alarm limits each time the system is used to ensure that they are appropriate for the patient being monitored.

INITIAL SET-UP

1. Turn the incubator power on using the Power Button (Figure 3 - 1, item 32).
2. Connect the pulse oximeter cable to the connector on the side of the incubator (Figure 3 - 2, item 2). Connect pulse oximeter sensor to the cable and to a suitable site on the patient being monitored.
3. To turn on the pulse oximeter displays, press the SET button (Figure 3 - 1, item 24) one time and then either the up or down arrow button (Figure 3 - 1, item 25) until the %SPO2 screen displays “On”. If the screen shows “---”, there is no value available.
4. When the pulse oximeter is disabled, the %SPO2 and PULSE screens will display “OFF”. All alarms related to the pulse oximeter will also be disabled.

SETTING HIGH AND LOW %SpO_2 ALARMS

NOTE: *The pulse oximeter display will convert back to Normal Operation Mode after 5 seconds if no buttons are pressed.*

1. Press the SET button (Figure 3 - 1, item 24) three times (or until the %SPO2 HI LED illuminates) to set the high SpO_2 alarm.
2. Use the up or down arrow buttons (Figure 3 - 1, item 25) to set the high alarm to the desired setting.
   a. Must be at least 1% higher than the SpO_2 low alarm setting.
   b. Can be set from 85 - 100%.
3. Press the SET button four times (or until the %SPO2 LO LED illuminates) to set the low SpO_2 alarm.
4. Use the up or down arrow buttons to set the low alarm to the desired setting.
   a. Must be at least 1% lower than the SpO_2 high alarm setting.
   b. Can be set from 0 - 84%.

SETTING HIGH AND LOW PULSE RATE ALARMS

NOTE: *The pulse oximeter display will convert back to Normal Operation Mode after 5 seconds if no buttons are pressed.*

1. Press the SET button (Figure 3 - 1, item 24) five times (or until the PULSE HI LED illuminates) to set the high Pulse alarm.
2. Use the up or down arrow buttons (Figure 3 - 1, item 25) to set the high alarm to the desired setting.
   a. Must be at least 1 bpm higher than the Pulse low alarm setting.
   b. Can be set from 85 - 241 bpm.
3. Press the SET button six times (or until the PULSE LO LED illuminates) to set the low Pulse alarm.
4. Use the up or down arrow buttons to set the low alarm to the desired setting.
   a. Must be at least 1 bpm lower than the Pulse high alarm setting.
   b. Can be set from 25 - 84 bpm.

SETTING THE ALGORITHM MODE (MASIMO ONLY)

NOTE: *The pulse oximeter display will convert back to Normal Operation Mode after 5 seconds if no buttons are pressed.*

Different algorithm modes can be used depending on the importance of SpO_2 sensitivity vs. probe-off detection. The system will power up in A1 Normal Mode as a default. When setting the Algorithm Mode, the setting will be displayed on the %SPO2 screen.

1. Press the SET button (Figure 3 - 1, item 24) 10 times (or until HI and LO %SPO2 LEDs are both illuminated) to set the Algorithm Mode.
2. Use the up or down arrow buttons (Figure 3 - 1, item 25) to choose one of the following modes:
   a. A1 = Normal Mode
      i. Provides the best combination of sensitivity and probe-off detection performance.
      ii. This mode is recommended for the majority of patients.

b. A2 = Maximum Mode

i. Interprets and displays data for very weak signals.

ii. This mode is recommended for the sickest patients or during procedures when clinician and patient contact is continuous.

c. A3 = APOD Mode

i. Least sensitive in picking up a reading on patients with low perfusion but provides the best detection for probe-off conditions.

ii. This mode is recommended for use on patients that are at particular risk of the sensor becoming detached (e.g. pediatric, combative, etc.)

SETTING THE AVERAGING MODE (MASIMO ONLY)

NOTE: *The pulse oximeter display will convert back to Normal Operation Mode after 5 seconds if no buttons are pressed.*

The Averaging Mode is used to determine how many values will be used to calculate the SpO_2 and pulse rate readings. A lower averaging rate uses fewer values to calculate the readings, resulting in more unstable readings, but will more quickly alert the user to potentially alarming patient conditions. The system will power up with C2 Middle Averaging Rate as a default. When setting the Averaging Mode, the setting will be displayed on the %SPO2 screen.

1. Press the SET button (Figure 3 - 1, item 24) 11 times (or until the HI and LO PULSE LEDs are both illuminated) to set the Averaging Mode.

2. Use the up or down arrow buttons (Figure 3 - 1, item 25) to choose one of the following averaging rates:

a. C1 = Low Averaging Rate

i. SpO_2 averaging rate is set to 2 - 4 seconds.

b. C2 = Middle Averaging Rate

i. SpO_2 averaging rate is set to 8 seconds.

c. C3 = High Averaging Rate

i. SpO_2 averaging rate is set to 16 seconds.

SETTING THE PERFUSION INDEX (MASIMO ONLY)

The Perfusion Index value represents a ratio between the pulse signal and noise. It helps clinicians determine if the pulse oximetry sensor is placed on an optimal monitoring site. The Perfusion Index value has a range of 0.0 - 20.0 (i.e. the higher the value, the better the perfusion).

1. Press and hold the down arrow button (Figure 3 - 1, item 25).
2. The perfusion index will be displayed on the %SPO2 screen. A display of "---" indicates no value is available.
3. Release the down arrow button to switch back to Normal Operation Mode.

NOTE: *Calibration and resetting the pulse oximeter algorithm or averaging mode may cause a slight delay in readings.*

NOTE: *Setting alarm set points, calibration, and resetting pulse oximeter algorithm or averaging methods will disable a portion of the pulse oximetry or oxygen monitoring displays (Masimo only).*

OPERATIONAL ALARMS AND WARNINGS

When the measured oxygen saturation or pulse rate falls out of the user-selected range, either "HI" or "LO" will flash on the appropriate screen approximately every 2 to 3 seconds. An audible alarm will also be heard every 3 seconds. Pressing the ***MUTE*** button will silence the audible alarm for approximately 1 minute.

Update Period Exceeded

The PulseOx system updates the data being displayed on the display screens every second. After a period of 5 seconds, if the system has not received an update, the screen will flash "PS". If an update still is unavailable after 15 seconds, "PS" will continue to flash and an audible alarm will sound until the condition is corrected.

Low Perfusion (Masimo Only)

The system displays "LP" when there are very low amplitude arterial pulsations. It has been suggested that at extremely low perfusion levels, pulse oximeters can measure peripheral saturation, which may differ from central arterial saturation[1]. This "localized hypoxemia" may result from the metabolic demands of other tissues extracting oxygen proximal to the monitoring site under conditions of sustained peripheral hypoperfusion. (This may occur even with a pulse rate that correlates with the ECG heart rate.)

NOTE: *If the low perfusion message is frequently displayed, find a better-perfused monitoring site. In the interim, assess the patient and, if indicated, verify oxygenation status through other means.*

Low Signal IQ (Masimo Only)

When the signal quality is very low, the accuracy of the SpO_2 measurement may be compromised, and the system displays "LS" on the PULSE Display Screen. When the "LS" message appears, proceed with caution and do the following:

- Assess the patient.
- Check the sensor and ensure proper sensor application. The sensor must be well secured to the site to maintain accurate readings. Also, misalignment of the sensor's emitter and detector can result in smaller signals.
- Determine if an extreme change in the patient's physiology and blood flow at the monitoring site occurred (e.g., an inflated blood pressure cuff, a squeezing motion, sampling of an arterial blood specimen from the hand containing the pulse oximetry sensor, severe hypotension, peripheral vasoconstriction in response to hypothermia, medications, or a spell of Raynaud's syndrome).
- With neonates or infants, check that the peripheral blood flow to the sensor site is not interrupted. Interruption, for example, may occur while lifting or crossing their legs during a diaper change.

[1] Severinghaus JW, Spellman MJ. Pulse Oximeter Failure Thresholds in Hypotension and Vasoconstriction. Anesthesiology 1990; 73:532-537

SECTION 4: PULSE OXIMETRY (OPTIONAL FEATURE)

TEST OF OPERATIONAL ALARMS

To ensure the pulse oximeter is generating the proper alarm indications, the following instructions should be followed:

1. After the sensor is attached to the patient, verify the patient alarms are functional by setting the SpO_2 and pulse rate high and low alarm limits beyond the patient readings.
   a. An audible alarm should sound.
   b. A “HI” or “LO” visual indicator should flash on the appropriate display screen.
2. Verify the sensor alarms are functional.
   a. Remove the sensor from the patient.
      i. An audible alarm should sound.
      ii. Error code “E6” should flash on the $\%SpO_2$ display screen.
   b. Disconnect the sensor from the incubator.
      i. An audible alarm should sound.
      ii. Error code “E9” should flash on the $\%SpO_2$ display screen.

PULSE OXIMETRY SENSORS

The incubator has been validated to be used with Masimo LNCS sensors and Nellcor OxiMax sensors. Refer to SECTION 13, PARTS AND ACCESSORIES, for vendor contact information to request sensor technical data. Before using any sensor, carefully read the sensor’s instructions for use. When selecting a sensor, consider the patient’s weight, the adequacy of perfusion, the available sensor sites, and duration of monitoring.

WARNING: **If using pulse oximetry during full body irradiation, keep the sensor out of the irradiation field. If the sensor is exposed to irradiation, the reading might be inaccurate or the unit might read zero for the duration of the active irradiation period.**

CAUTION: Oxygen sensor and pulse oximetry cables must be contained within cart or otherwise secured when not in use.

SECTION 4: PULSE OXIMETRY (OPTIONAL FEATURE)

CAUTION: Pulse oximeter probes and cables are designed for use with specific monitors. Only use Masimo sensors and patient cables for Masimo pulse oximetry model. Only use Nellcor sensors and patient cables for Nellcor pulse oximetry model. Verify the compatibility of the monitor, sensor, and cable before use, otherwise patient injury can result.

Tissue damage can be caused by incorrect application or use of a pulse oximetry sensor, for example, by wrapping the sensor too tightly. Inspect the sensor site as directed in the sensor instructions for use to ensure skin integrity and correct positioning and adhesion of the sensor.

High ambient light sources such as surgical lights (especially those with a xenon light source), bilirubin lamps, fluorescent lights, infrared heating lamps, and direct sunlight can interfere with the performance of a SpO_2 sensor. To prevent interference from ambient light, ensure that the sensor is properly applied and that the sensor site is covered with opaque material if necessary. Failure to take this precaution in high ambient light conditions may result in inaccurate measurements.

CAUTION: If a sensor or cable is damaged in any way discontinue use immediately.

PULSE OXIMETRY TESTERS / SIMULATORS

To verify the functionality of the pulse oximeter sensors and cables, some commercially available functional testers may be used (refer to the testing device's instructions for use to determine compatibility). The functional testers are designed to interface with the pulse oximeter's expected calibration curves and measure the total error of the pulse oximetry system. However, due to the complex interaction between the pulse oximeter sensor and patient, these testers cannot be used to assess the accuracy of the pulse oximeter sensors. Refer to SECTION 11, PULSE OXIMETER SPECIFICATIONS (OPTIONAL FEATURE), to review sensor accuracy information or contact the pulse oximeter vendor listed in SECTION 13, PARTS AND ACCESSORIES.

SECTION 5: OXYGEN MONITOR (OPTIONAL FEATURE)

OXYGEN MONITOR PRINCIPLES OF OPERATION

The oxygen monitor is intended to be used to measure and display the oxygen concentration as a volume fraction percentage (%) in an area to which a Maxtec MAX-250E oxygen sensor is exposed. The readings are proportional to the partial pressure of oxygen (PO_2), which is equal to the percentage of oxygen times the absolute pressure of the environment being measured. The oxygen monitor can be influenced by the following:

Temperature

In order for oxygen readings to be accurate, the oxygen monitor must be thermally stable when calibrated and when measurements are taken. If temperature conditions change, adequate time must be allowed for the sensor to stabilize and give accurate readings. For best results, calibrate the oxygen monitor at the same temperature at which the monitor will be used.

Pressure

The readings from the oxygen monitor are proportional to the oxygen concentration only if pressure is held constant. The oxygen monitor does not compensate for changes in barometric pressure. Because the flow rate of the gas being sampled can affect the pressure at the sensor in that the back pressure may change, the oxygen monitor should be calibrated at the same pressure as the sample gas. Changes in elevation result in calibration error of approximately 1% of reading per 250 feet. In general, calibration of the instrument should be performed when the geographic elevation at which the product is being used changes by more than 500 feet. The oxygen monitor should not be calibrated at a pressure above 2 atmospheres as this is beyond the sensor's intended use.

Humidity

Condensation due to high humidity can adversely affect the oxygen monitor. The sensor should be calibrated and used in environments < 95% relative humidity and placed upstream of any humidifier (if used in a breathing circuit) to reduce the risk of water condensation.

CAUTION: Only use International Biomedical cable and Maxtec sensor for oxygen monitoring.

CAUTION: Use the oxygen monitor when oxygen is delivered to the infant.

OXYGEN MONITOR SET-UP INSTRUCTIONS

The following steps will instruct the user how to initially set up the oxygen monitor, program low and high alarm settings, and how to calibrate the oxygen sensor.

CAUTION: Check alarm limits each time the system is used to ensure that they are appropriate for the patient being monitored.

INITIAL SET-UP

1. Turn the incubator power on using the Power Button (Figure 3 - 1, item 32).
2. Connect the oxygen sensor cable to the connector on the side of the incubator (Figure 3 - 2, item 1).
3. Connect the oxygen sensor to the cable and place in area to be monitored.
   a. Place the oxygen sensor inside the infant chamber to monitor ambient oxygen concentration within the chamber.
   b. Connect the oxygen sensor to a 15 mm adapter on a patient breathing circuit to use in conjunction with a ventilator.
4. To turn on the Oxygen display, press the SET button (Figure 3 - 1, item 24) two times and then either the up or down arrow buttons (Figure 3 - 1, item 25) until the OXYGEN screen displays “On”. If the screen shows “---”, there is no value available.
5. When the Oxygen Monitor is disabled, the OXYGEN screen will display “OFF”. All alarms related to the Oxygen Monitor will also be disabled.

SETTING HIGH AND LOW OXYGEN ALARMS

NOTE: *The Oxygen Monitor display will convert back to Normal Operation Mode after 5 seconds if no buttons are pressed.*

1. Press the SET button (Figure 3 - 1, item 24) seven times (or until the OXYGEN HI LED illuminates) to set the high oxygen alarm.
2. Use the up or down arrow buttons (Figure 3 - 1, item 25) to set the high alarm to the desired setting.
   a. Must be at least 1% higher than the low oxygen alarm setting.
   b. Can be set from 31 - 100%.

3. Press the SET button eight times (or until the OXYGEN LO LED illuminates) to set the low Oxygen alarm.

4. Use the up or down arrow buttons to set the low alarm to the desired setting.

   a. Must be at least 1% lower than the high oxygen alarm setting.

   b. Can be set from 18 - 30%.

5. If the low oxygen alarm is set below 21.0%, the yellow “<21%” warning LED (Figure 3 - 1, item 23) will be illuminated.

OXYGEN MONITOR CALIBRATION

NOTE: *The Oxygen Monitor display will convert back to Normal Operation Mode after 5 seconds if no buttons are pressed.*

1. Press the SET button (Figure 3 - 1, item 24) nine times (or until the CAL LED illuminates, Figure 3 - 1, item 21) to calibrate the oxygen monitor.

2. Use the up or down arrow buttons (Figure 3 - 1, item 25) to change the oxygen percentage to the concentration of oxygen the sensor is exposed to during the calibration (use 20.9% if exposed to room air). Expose the sensor to the calibration gas for several minutes to ensure the sensor reading has stabilized.

   a. Can be set from 15.0 - 100%.

      NOTE: *If using a calibration gas other than room air, procure and dispose of gas according to hospital policy.*

3. Once the calibration setting is set to the desired level, press both the up and down arrow buttons simultaneously. “CAL” will be displayed on the OXYGEN screen to confirm that calibration is complete.

   NOTE: *Calibrate the oxygen sensor daily when in use or if environmental conditions change significantly (i.e. Temperature, Humidity, or Barometric Pressure).*

For oxygen readings to be accurate, the oxygen monitor must be thermally stable when calibrated and when measurements are taken. Calibration should also be done at the same pressure as when in use due to the fact that the flow rate of sample gas can change the back pressure at the sensing point, changing the oxygen reading. Never calibrate at a pressure above 2 atmospheres as this is beyond the sensor's intended use. The sensor should be calibrated and used in environments < 95% relative humidity and placed upstream of any humidifier to reduce the risk of water condensation which can affect the oxygen sensor.

CAUTION: Dropping or severely jarring the oxygen sensor after calibration may shift the calibration point enough to require recalibration.

OPERATIONAL ALARMS AND WARNINGS

When the measured oxygen concentration falls out of the user-selected range, either "HI" or "LO" will flash on the OXYGEN screen approximately every 3 seconds. An audible alarm will also be heard every 3 seconds. Pressing the ***MUTE*** button will silence the audible alarm for approximately one minute.

TEST OF OPERATIONAL ALARMS

To ensure the oxygen monitor is generating the proper alarm indications, the following instructions should be followed:

1. After the oxygen sensor is placed in the area to be monitored, verify the out-of-range alarms are functional by setting the oxygen high and low alarm limits beyond the oxygen readings of the area.
   a. An audible alarm should sound.
   b. A "HI" or "LO" visual indicator should flash on the OXYGEN display screen.
2. Verify the sensor alarm is functional by disconnecting the oxygen sensor from the cable attached to the incubator.
   a. An audible alarm should sound.
   b. Error code "E7" should flash on the OXYGEN display screen.

SECTION 5: OXYGEN MONITOR (OPTIONAL FEATURE)

OXYGEN SENSOR

The Maxtec MAX-250E oxygen sensor is similar in operation as a conventional galvanic cell (lead anode / KOH electrolyte) oxygen sensor. However, the chemistry of the MAX-250E sensor is unique. By implementing a weak acid electrolyte, MAX-250 sensors offer superior performance over the conventional oxygen sensor. The weak acid electrolyte is unaffected by CO_2, CO, and NO_x. This results in a sensor with a superior technical advantage over KOH-type sensors in applications where these gases are present.

Use only Maxtec Max-250E oxygen sensors and International Biomedical supplied cables with the incubator. Max-250E oxygen sensors offer quick response, stability, and life greater than 9000 hours.

CAUTION: The Maxtec MAX-250E oxygen sensor is a sealed device containing a mild acid electrolyte, lead (Pb), and lead acetate. Lead and lead acetate are hazardous waste constituents and should be disposed of properly, or returned to Maxtec or International Biomedical for proper disposal or recovery.

CAUTION: Oxygen sensor and pulse oximetry cables must be contained within cart or otherwise secured when not in use.

CAUTION: Only use International Biomedical cable and Maxtec sensor for oxygen monitoring.

SECTION 6: PREVENTATIVE MAINTENANCE

To ensure proper operation, standby readiness, and malfunction reporting, International Biomedical recommends following a preventative maintenance program. The daily preventative maintenance procedures can be performed by a knowledgeable incubator transport person. Monthly maintenance procedures should be performed by an appropriately trained biomedical maintenance person. No other preventative maintenance is required.

NOTE: *Perform preventative maintenance procedures on all Accessory Equipment as recommended in the manual for each piece of equipment.*

DAILY MAINTENANCE

The following maintenance procedures should be performed on a daily basis by a knowledgeable incubator transport person.

OPERATIONAL CHECK

1. Check the AC power cord and ensure that there are no cuts or severe bends in the cord, that all three prongs on the plug are in good condition, and that the cord is securely fastened in place. Replace the cord as needed.
2. Ensure the incubator is plugged in to an appropriate AC power source. Verify the ***BAT CHG*** indicator (Figure 3 - 1, item 28) on the front panel is illuminated and that all other indicators are off when the incubator power is off.
3. With the incubator connected to AC power, press the power button (Figure 3 - 1, item 32) to turn the incubator on. The incubator will perform a test of all indicators, LEDs, and the audible alarm. Ensure all the indicators and LEDs illuminate, and that the audible alarm can be heard. Verify the ***AC OP*** indicator (Figure 3 - 1, item 29) remains illuminated after completion of the test.
4. Place a hand inside the right side of the infant chamber and verify air flow. The fan should be able to be heard at the left side of the incubator.
5. A few minutes after turning the incubator on, the air temperature inside the infant chamber should begin to increase and will be displayed on the Main Display Screen. Verify.
6. Turn on the external light and ensure it operates under AC power. Turn off the light.

7. Disconnect the AC power connection from the incubator and observe that the ***BAT OP*** indicator (Figure 3 - 1, item 31) is illuminated and that the Main Display Screen still displays the infant chamber air temperature.

8. Turn on the external light and ensure it operates under Battery power. Turn off the light.

9. Turn off the incubator.

10. If external 12 volt DC power is to be used, check the 12 volt DC power cord and ensure that it has no cuts or severe bends and that the connectors have not been damaged.

11. Connect the incubator to a DC power source. Turn on the incubator and verify the ***DC OP*** indicator (Figure 3 - 1, item 30) is illuminated and that the Main Display Screen still displays the infant chamber air temperature.

12 Turn on the external light and ensure it operates under DC power. Turn off the light.

13. Disconnect the DC power connection and reconnect AC power to the incubator and turn the incubator off.

    CAUTION: DO NOT leave the 12 volt cord attached to the DC connector of the incubator when not operating in DC power mode.

14. Inspect the mattress and positioning straps for damage. Repair or replace as needed.

    WARNING: **The transport incubator is Type B equipment and the baby may not be electrically isolated from earth. Care must be taken that additional equipment connected to the baby is electrically safe. To ensure patient electrical isolation, connect only to other equipment with electronically isolated circuits.**

AIR / OXYGEN SYSTEM

1. If gas tanks are included in the incubator assembly, ensure they are properly secured.

2. With the air and oxygen tank regulators connected to appropriate external devices, open the valves on the air and oxygen tanks and ensure that each tank is fully pressurized and ready for use.

3. Ensure that none of the hoses connecting the tanks to external devices are leaking or kinked.

INFANT CHAMBER CHECK

CAUTION: Do not move the incubator by pushing on the infant chamber. The infant chamber is not designed to sustain the forces to push the incubator. Stress fractures in the infant chamber can occur.

1. Ensure that the infant chamber is free from cracks.
2. Ensure that the gasket between the chambers and airflow tray is in place. Check that the grommets in the tubing through-holes on the infant chamber are also in place.
3. Ensure that the infant chamber is secured to the incubator with the two latches on both ends of the infant chamber.

   CAUTION: Do not overtighten the infant chamber screws. Do not strip the aluminum into which these screws are threaded.

4. Ensure that the infant chamber is clean and ready for transport, as determined by the transport team leader.

   WARNING: **This incubator was calibrated with the infant chamber originally supplied. If this chamber is exchanged for an infant chamber of a different configuration or size, the temperature calibration will be affected. Consult International Biomedical before returning the incubator to service.**

CART AND ACCESSORIES

1. Inspect the casters for wear or damage. Inspect for worn or damaged rubber and tightness of retaining nuts. Replace damaged casters immediately.
2. Ensure the incubator is securely fastened to the cart.
3. Test operation of other accessories as indicated by manufacturer's recommendations.

   CAUTION: When the incubator is attached to a rigid cart with an internal power strip, the power cord must be contained within cart or secured on the end of cart with cord holders when not in use.

SENSORS AND CABLES (OPTIONAL EQUIPMENT)

1. Inspect the oxygen sensor and the pulse oximeter sensor for damage. Replace, if necessary.
2. Inspect the oxygen sensor cable and pulse oximeter cable for wear or damage. Replace, if necessary.

CLEANING OF INCUBATOR AND CHAMBER

WARNING: **The incubator should be turned off and AC or DC power disconnected when cleaning.**

CAUTION: CLEANING AND CARE: Do not autoclave, pressure sterilize, or gas sterilize the incubator, cables, or sensors. Use cleaning solutions sparingly as excessive solution can flow into the incubator and cause damage to internal components. Do not soak or immerse the incubator or sensors in any liquid. Do not use petroleum-based, alcohol, acetone, or other harsh solvents. See cleaning instructions of reusable sensors and cables in directions for their use.

Wash the chamber, infant mattress, and top surface of the airflow tray with mild soap or detergent and water solution.

CAUTION: Do not drip cleaning solution through the holes where the swell latches fit into the air flow assembly.

Household ammonia diluted in water in the concentrations recommended for hospital cleaning may also be used. These solutions may be applied with a soft absorbent cloth, followed by rinsing with clean water. Wipe away residue with soft chamois or cellulose sponge material.

CAUTION: The infant tray grounding tabs are sharp; use care when cleaning the air flow system.

CLEANING OF CABLES (OPTIONAL EQUIPMENT)

Clean the oxygen sensor cable and the pulse oximeter patient cable by wiping with a 70% isopropyl alcohol pad (or equivalent) and allow the cables to dry before reusing.

CLEANING OF PULSE OXIMETRY SENSOR (OPTIONAL EQUIPMENT)

The provided sensors are disposable and should only be reused on the same patient if the adhesive still adheres to the skin and the detector window is clear. Otherwise, properly dispose of the sensor (see SECTION 6, PRODUCT DISPOSAL / RECYCLING, for disposal methods). For reusable sensors, see the manufacturer's cleaning instructions.

CLEANING OF OXYGEN SENSOR (OPTIONAL EQUIPMENT)

When cleaning or disinfecting the oxygen sensor, take appropriate care to prevent any solution from entering the sensor end or the connector end. The oxygen sensor may be cleaned using a mild detergent and moist cloth and disinfected using standard topical disinfectants.

MONTHLY MAINTENANCE

The following procedures should be performed monthly by a biomedical maintenance person. These checks should be in addition to the daily maintenance checks.

OPERATIONAL CHECK

1. Connect the incubator to an AC power source and turn the incubator power button on.
2. Adjust the setpoint to 38.9° C and observe the incubator as the temperature rises to perform the following checks.
3. As the temperature reaches 38.5 ± 0.1° C, the ***HIGH TEMP*** indicator should illuminate.
4. Adjust the setpoint to 37° C and allow the temperature to stabilize at that setting.

KEYBOARD / LED CHECK (OPTIONAL FEATURE)

1. Turn the incubator on, press the PulseOx SET button.
2. Press the Up Arrow button and see the display in the Pulse and %SpO_2 change from "OFF" to "On".
3. Press the Down Arrow button and see the display in the Pulse and %SpO_2 change from "On" to "OFF".
4. Check that the %SpO_2 and Pulse HI and LO LEDs are on. Continue to press the SET button and check that the LEDs correspond to the marked display.

ALARM MUTE CHECK (OPTIONAL FEATURE)

1. Turn on the Oxygen Monitor and unplug the oxygen sensor.
2. Listen for the alarm. After hearing the alarm, press the ***MUTE*** button.
3. Verify the mute on LED lights up and the alarm silences.
4. Wait approximately 1 minute and verify the alarm sounds again.
5. Turn off the Oxygen Monitor and plug the sensor back in.

TANK INSPECTION

1. Inspect the air and oxygen tanks for the date of the last hydrostatic test. Each tank must be hydrostatically tested periodically according to the manufacturer's recommendation. The date of the last test is stamped on the top of the tank in month and year (mmyy).
2. Inspect the recharge record of each tank and, if the record indicates there have been a maximum number of pressure cycles as per DOT (Department of Transportation) specifications, the tank should be destroyed and another tank used.

3. Inspect tanks for abrasion, cuts, or other damage.

4. The tanks should be replaced according to the manufacturer's recommendation.

INFANT CHAMBER INSPECTION & CLEANING

1. Carefully inspect the infant chamber for cracks and crazing of the Plexiglas.

2. Check all screws and knobs for tightness.

   CAUTION: Do not overtighten the infant chamber screws!

3. Wash chamber with mild soap or detergent and water solution to clean the Plexiglas. Household ammonia in water in the concentrations recommended for hospital cleaning is also excellent. These solutions may be applied with a soft absorbent cloth, followed by rinsing with clean water. Wipe away residue with soft chamois or cellulose sponge material.

   CAUTION: Any type of alcohol or solvents should never be used for cleaning the infant chamber, as these solvents tend to soften the surface and often cause crazing. Cleansing materials containing abrasives or strong solvents as found in some window cleaning preparations should never be used to clean the inner and outer infant chamber.

BATTERY TEST

The incubator is equipped with a 12 volt 26 ampere-hour battery. Under normal operating conditions in an ambient temperature of 20° C, a new fully charged battery should operate the incubator for over three hours. Battery replacement is recommended yearly, or if operating time is less than 1 ¼ hours.

The battery is specified for only a finite number of complete discharges. The test of the battery will completely discharge it. The test can be performed as follows:

1. Ensure the battery is fully charged by connecting the incubator to AC power for 12 hours with the power switch off.

2. Place the incubator in a room with a temperature of approximately 20 - 23° C. Turn on the incubator power switch and adjust the setpoint on the front panel to 37° C. Let the incubator stabilize to its operational temperature with AC power.

3. After the incubator has reached operating temperature, allow an additional twenty minutes for stabilization.

4. After stabilization, disconnect the AC power and note the time. The incubator will automatically switch to battery operation.

5. Note the time at which the low battery alarm activates.

6. The difference between the noted times in steps 4 and 5 is the operational time. If this time is less than 1 ¼ hour, the battery should be replaced.

AIR FLOW SYSTEM INSPECTION & CLEANING

1. Remove the inner and outer infant chambers from the incubator and CAREFULLY set them aside.

2. Remove the infant mattress. Lift the swell latches on the infant tray and remove the infant tray. Ensure the swell latches are securely attached to the infant tray. Clean the infant mattress and infant tray with a hospital approved cleaning solution.

   WARNING: **Do not remove the infant tray and touch exposed circuitry and patient simultaneously.**

   NOTE: *The infant tray material is Kydex 100 and the support plate material is conductive clear chromate aluminum.*

3. Lift the two swell latches on impeller cover and remove it. Clean the cover with a hospital approved cleaning solution.

   CAUTION: Entry of fluids into fan motor, thermistors, or warming unit will significantly reduce service life. Clean this area by wiping with a cloth dampened with an appropriate cleaning solution and wipe dry.

4. Clean the airflow system with a hospital approved cleaning solution.

   WARNING: **The infant tray grounding tabs are sharp, use care when cleaning the air flow system.**

5. Dry and reassemble the air flow, infant tray system.

   CAUTION: Do not drip any cleaning solution through the holes where the swell latches fit into the air flow assembly.

HARDWARE

1. Ensure that all screws on the incubator are properly tightened.

   CAUTION: Do not strip the aluminum into which the screws are threaded.

BATTERY CARE

The incubator contains a sealed lead battery (P/N 888-0071). If the incubator is not to be used for an extended period of time, disconnect and remove the battery. After use or complete discharge, immediately recharge the battery. If not regularly used or maintained on charge, the battery should be recharged on a monthly basis to prevent battery degradation. The battery is warranted for a period of ninety days. The life of the battery is dependent on the number and depth of discharge cycles. At the end of the battery's life, it must be recycled or disposed of properly.

CAUTION: The incubator MUST be plugged into AC power and the battery recharged after any battery usage. The battery will sustain damage if drained of power and not recharged.

Accessory equipment may also contain batteries which must be properly cared for. Consult the accessory equipment user's manuals for instructions.

PRODUCT DISPOSAL / RECYCLING

The incubator should be returned to International Biomedical for recycling when it reaches the end of its life (7 to 10 years). The incubator's battery can be taken to any battery recycling facility when it reaches the end of its life (approximately 200 discharge cycles, dependent on depth of discharge).

The pulse oximetry sensors are single-use sensors and should be disposed of in a manner consistent with local laws.

GENERAL TROUBLESHOOTING

The following list describes the most common issues that arise through use of the incubator and the suggested corrective actions. If further assistance is needed, contact International Biomedical.

WARNING: **OBSERVE BEST PRACTICE: The instructions in this manual in no way supersede established medical procedures or staff preference concerning patient care.**

Why is the AC fail alarm sounding when the unit is unplugged?

This is normal. The alarm indicates that the unit is no longer connected to AC power. Press the ***MUTE*** button to clear it.

Why is the Air Flow alarm sounding?

When a certain air flow rate is not met, the alarm sounds. Check for an obstruction, such as a blanket, in the airflow pathway. Check the chamber for cracks, missing grommets, or missing gaskets. Verify that the fan impeller is spinning. Verify that all swell latches are present and tightly secured.

Why don't the buttons do anything when I press them?

Ensure the incubator is turned on. If problem still persists, the membrane panel has been damaged and the overlay needs to be replaced. Contact International Biomedical for assistance.

Why won't the light turn on?

Ensure the incubator is turned on; the light gets its power from the incubator and will not work unless the incubator is on. If the light still doesn't work with the incubator on, it needs to be replaced (e.g. the LED may be bad, there may be a short in the circuitry). Contact International Biomedical for assistance.

MAIN DISPLAY ERROR CODES

Table 7 - 1 shows the failure codes that may be seen on the Main Display Screen. If further assistance is needed, contact International Biomedical.

Table 7 - 1 Main Display Screen Failure Codes

Error Code	Failure	Corrective Action
E01	Set Point Output Voltage Error	The display board needs to be replaced. Contact International Biomedical for assistance.
E02	Temperature Out of Range: baby temp. probe is disconnected, damaged, or out of sensor's useable range	Reconnect temperature probe to incubator. If error persists, replace temperature probe.
E03	Battery Voltage Out of Range: battery is drained or overcharged	Charge battery by plugging into AC power for a minimum of 8 hours. If problem persists, battery must be replaced.
E04	Display Range Limit Exceeded: value to be shown is outside of the display's limits	Verify temperature using secondary method. If temperature seems reasonable, the temperature sensor is faulty and must be replaced. Contact International Biomedical for assistance
E07	EEPROM Write Failure: temperature set point not saved	Turn the incubator off and then on again. Repeat temperature set procedure. If error still occurs, the display board must be serviced. Contact International Biomedical for assistance.
E08	EEPROM Value Out of Range: temperature set point out of range	
E09	EEPROM Corrupt	

PULSE OXIMETER AND OXYGEN MONITOR FAILURE CODES (OPTIONAL FEATURE)

Table 7 - 2 shows the failure codes that may be seen when using the Masimo Pulse Oximeter. Failure codes will be displayed in the %SPO2, PULSE, or OXYGEN display screens, as designated in the table. In some cases, a power down may reset the error; however, the pulse oximeter and/or oxygen monitor should be used with extreme caution. If further assistance is needed, contact International Biomedical.

Table 7 - 2 Masimo Pulse Oximetry and Oxygen Monitoring Failure Codes

%SPO2 Display	PULSE Display	OXYGEN Display	Failure	Corrective Action
-	PS (flashing)	-	Pulse Search	Ensure proper sensor application. Reposition sensor, if necessary.
-	LP (flashing)	-	Low Perfusion	Move sensor to better perfused site.
-	LS (flashing)	-	Low Signal IQ	Ensure proper sensor application. Move sensor to a better perfused site.
-	-	E1	O_2 Cal. Data Lost	Recalibrate the oxygen sensor per SECTION 5.
-	-	E7	Oxygen Value Out of Range	Confirm sensor cable is attached. Recalibrate oxygen sensor. If error persists, replace cable.
E2	E2	-	Alarm Setpoint Data Lost	Set the alarm limits per SECTION 4 and/or SECTION 5.
E4	-	-	Too Much Light	Remove or reduce lighting. Cover sensor from light. Reposition sensor.
E5	-	-	Signal Interference	Remove outside interference.
E6	-	-	Sensor Off Patient	Reattach sensor to patient.
E7	multiple	-	Bad Sensor	Replace sensor. Refer to the instructions for the sensor being used.
E8	-	-		
E9	-	-	No Sensor Connected (or the signal has been lost for more than 4 seconds)	Confirm a sensor is attached to the incubator and the patient being monitored.
E10	-	-	Display board failure	Do not continue to use incubator. Send unit to service department for repair. Contact International Biomedical for more information.
E32	-	-		
E33	-	-		
E34	-	-		
E35	-	-		
E36	-	-		
E37	-	-		
E38	-	-		
E39	-	-		
E40	-	-		
E63	multiple	-		

Table 7 - 3 and Table 7 - 4 show the failure codes that may be seen when using the Nellcor Pulse Oximeter. In Table 7 - 3, the error code listed will be displayed on the PULSE display screen. Additional error codes may be displayed on the %SPO2 display screen, but are unnecessary to describe here. If further assistance is needed, contact International Biomedical.

Table 7 - 3 Nellcor Pulse Oximetry Board and Software Failure Codes

PULSE Display	Error Description	Corrective Action
1 or 2	Malfunction (typically, a failed hardware test)	Cycle the PulseOx system off and then on again. If error persists, the PulseOx system is damaged and needs to be replaced.
4	Software Error	Wait for 15 seconds to see if the software resets itself. If no signal is received after 15 seconds, the PulseOx system needs to be serviced. Contact International Biomedical.
5	Communications Error	Wait for 15 seconds to see if communications reset. If no signal is received, the PulseOx system needs to be serviced. Contact International Biomedical.
6	Defective Sensor Detected	Ensure the sensor is properly connected. Disconnect and reconnect the sensor. If the error occurs again, replace the sensor and/or cable. If the error persists, the PulseOx system needs to be serviced. Contact International Biomedical.

Table 7 - 4 Nellcor Pulse Oximetry Sensor Failure Codes

Sensor Status	%SPO2 Display	PULSE Display	Corrective Action
Sensor Disconnected	E9	1	Ensure sensor is connected to the incubator. Reconnect, if necessary.
Sensor Off	E6	1	Reattach sensor to patient.
Light Pulse Search	-	PS	Ensure proper sensor application. Reposition sensor, if necessary.
Blink Pulse Search	-	PS	
Light Interference	E5	1	
Blink Interference	E5	1	

SECTION 8: INTERNAL COMPONENT ACCESS

This section contains procedures for accessing and removing components from the incubator chassis.

WARNING: **SERVICE ONLY BY QUALIFIED PERSONNEL: The incubator should be serviced only by qualified personnel in the Electronics Maintenance or Biomedical Engineering Department within the hospital or by International Biomedical personnel.**

WARNING: **HIGH VOLTAGES: Dangerous voltages may be contained on circuitry internal to the unit. Maintenance should be performed by qualified personnel only.**

CAUTION: The incubator electronics contain static sensitive components that can be damaged by improper handling. Use approved grounding techniques for work areas and service personnel.

NOTE: *Servicing the transport incubator requires special equipment and tools. Do not attempt to service the transport incubator without proper equipment.*

ELECTRONICS COMPARTMENT ACCESS

This section details the procedure to be followed to gain access to the electronics compartment of the incubator.

1. Turn the incubator power button off and unplug the AC power cord.
2. Remove the inner and outer infant chambers.
3. Remove the four latches that secure the infant chamber (two screws per latch).
4. Remove the four screws that secure the lamp assembly and gently pull the assembly to expose the connector. Disconnect it and remove the lamp assembly.
5. Carefully lift the front edge of the airflow tray assembly just enough to gain sufficient access to disconnect the two electrical cables and the ground cable. Disconnect both electrical cables and the ground cable.
6. The airflow tray assembly can now be completely removed.

BATTERY REMOVAL

This section details the procedure to be followed to remove and replace the battery. The procedure detailed to gain access to the electronics compartment must be followed before beginning this procedure. Due to the weight of the battery and limited working area, exercise caution when inserting / removing battery to avoid damage to circuit boards or cables.

1. Loosen the four quarter turn fasteners securing the battery and remove the battery clamping bracket.
2. Remove the negative lead from the battery terminal. If necessary, the battery may be carefully lifted or tilted to allow better access to the terminal.
3. Remove the positive lead from the battery terminal. If necessary, the battery may be carefully lifted or tilted to allow better access to the terminal.
4. The battery can now be carefully removed.

CAUTION: Replace battery only with International Biomedical part number 888-0071.

CONTROL BOARD REMOVAL

This section details the procedure to be followed to remove the control board assembly. The procedure detailed to gain access to the electronics compartment must be followed before beginning this procedure.

CAUTION: The incubator electronics contain static sensitive components that can be damaged by improper handling. Use approved grounding techniques for work areas and service personnel.

1. Disconnect the two remaining cables from connectors J1 and J3.
2. From underneath, remove the three screws securing the aluminum heatsink and spacer to the floor of the electronics compartment. When reassembling, clean the bottom of the aluminum extrusion and spacer and apply a thin coating of a suitable heatsink compound to all mating surfaces.
3. Remove the six screws securing the printed circuit board to the six standoffs.
4. The control board can now be lifted out of the frame.

DISPLAY BOARD REMOVAL

This section details the procedure to be followed to remove the display board assembly. The procedure detailed in the previous section to gain access to the electronics compartment must be followed before beginning these procedures.

CAUTION: The incubator electronics contain static sensitive components that can be damaged by improper handling. Use approved grounding techniques for work areas and service personnel.

1. Disconnect the ribbon cable from the display board.
2. Disconnect the skin temp cable from the display board.
3. Remove the four locknuts that secure the display board to the incubator chassis.
4. Pull the PC board towards the rear of the chassis. The display board and the front panel will come out together as a unit.
5. Disconnect the membrane keypad connector from the display board.
6. Remove the five screws and nylon washers securing the PC board to the front panel standoffs.
7. The display board may now be removed from the front panel.

PULSEOX DISPLAY BOARD REMOVAL

This section details the procedure to be followed to remove the PulseOx display board assembly. The PulseOx daughter board will be still attached (see Pulse Oximeter Board Removal procedure for details on removing the daughter board). The procedure detailed in the previous section to gain access to the electronics compartment must be followed before beginning this procedure.

CAUTION: The incubator electronics contain static sensitive components that can be damaged by improper handling. Use approved grounding techniques for work areas and service personnel.

1. Disconnect the ribbon cable from the display board (***J1***).
2. Disconnect the skin temp cable from the display board (***J3***).
3. Disconnect the oxygen sensor cable from the display board (***J11***).

4. Disconnect the PulseOx flex cable from the daughter board.
   a. For Masimo, connector ***J13*** on display board
   b. For Nellcor, connector ***J14*** on display board
5. Remove the four locknuts that secure the display board to the incubator chassis.
6. Pull the PC board towards the rear of the chassis. The display board and the front panel will come out together as a unit.
7. Disconnect the membrane keypad connector from the display board (***J4***).
8. Remove the four visible screws and nylon washers securing the PC board to the front panel standoffs (one in each corner and one in the middle).
9. Remove the PulseOx daughter board in order to access the last display PCB screw.
   a. For Masimo, remove 3 screws and the jumper connected to J13.
   b. For Nellcor, remove 2 screws and the jumper connected to J14.
10. The display board may now be removed from the front panel.

PULSE OXIMETER BOARD REMOVAL

This section details the procedure to be followed to remove the PulseOx daughter board assembly. The electronics compartment access procedure must be followed before beginning this procedure.

CAUTION: The incubator electronics contain static sensitive components that can be damaged by improper handling. Use approved grounding techniques for work areas and service personnel.

1. Disconnect the PulseOx flex cable from the PulseOx daughter board.
   a. For Masimo, connector ***J3*** on PulseOx board
   b. For Nellcor, connector ***J4*** on PulseOx board
2. Disconnect the cable from the side panel of the incubator to the PulseOx daughter board (***J1***).
3. Remove the PulseOx daughter board from the standoffs on the display board.
   a. For Masimo PulseOx board, there are 3 standoffs.
   b. For Nellcor PulseOx board, there are 2 standoffs.

SECTION 9: CALIBRATION PROCEDURES

The following calibration procedures should be performed only by a person who is experienced in electronics and has the proper test equipment. The entire system can be calibrated using the System Calibration Procedure. Individual board calibration procedures (i.e. Control Board Calibration and Display Board Calibration) should be performed after a board has been repaired. In order to perform any of the calibration procedures, the circuitry must be accessed (refer to SECTION 8 for instructions on accessing the electronics compartment).

CALIBRATION TEST EQUIPMENT REQUIRED

- Four Digit Digital Voltmeter
- Variable DC voltage power supply 10 - 20 volts at 10 amperes min
- Oscilloscope
- Resistor decade box ± 1% accuracy
- 3 Clip lead jumpers (preferably one red and two black)
- 10 kΩ resistor
- Airborne temperature test circuit P/N 387-1190 (Available from International Biomedical)
- Airborne sensor simulator P/N 387-1191 (Available from International Biomedical)
- Calibrated digital temperature measuring device 0.1° C accuracy

SYSTEM CALIBRATION PROCEDURE

The following procedure should be used to calibrate the system after repairs or during routine maintenance.

1. Locate the **J2** connector on the control board and connect the sensor simulator connector. If not using a sensor simulator, leave airflow tray connected to **J2**. Ensure **JP1** on the control board is set to route the Secondary Thermistor to the display board's "measured temperature" input (jumper **JP1** should be on positions 1 and 3). Connect the incubator to an appropriate AC power source. Check the voltage at the positive battery terminal. It should be approximately 13.7 ± 0.2 volts with a fully charged battery.

2. Check the voltage at **TP1** on control board. It should be 13.7 ± 0.1 volts with a fully charged battery. Adjust **R1** if necessary. The **BAT CHG** indicator should be on.

3. Turn the power button on and observe for a couple of seconds; all LEDs should be illuminated, all seven-segmented LED elements turned on, and the audible alarm on. The **BAT CHG** and **AC OP** indicators should stay on.

4. Remove the sensor simulator. **SENS FAIL** and **SYS FAIL** alarms should activate. Reconnect the sensor simulator to **J2** on the control board.

5. Set the thermostat switch on the sensor simulator to OPEN (up position). The **AIR FLO** indicator should be on and alarm should sound continuously. Set the thermostat switch to CLOSED (down position).

6. Turn the incubator power off. Remove the fan impeller from underneath the mattress tray, turn the unit on, adjust the temperature setpoint to 37.0° C, and verify that the **AIR FLO** alarm activates under twelve minutes. The **AIR FLO** alarm may sound for a few minutes. Replace the fan impeller.

7. With the incubator turned on, disconnect the power cord. An audible alarm indicating loss of AC power should sound, which can be silenced by pressing the **MUTE** button. Turn the incubator power off and disconnect the negative battery cable. Set the external power supply to 12 volts and connect the external power supply output to the battery cables, observing proper polarity.

8. Turn the incubator power on. Connect the digital multimeter leads to the battery cables. Slowly reduce the supply voltage. The **LOW BAT** warning LED should illuminate at 10.8 ± 0.3 volts and the audible alarm should sound at approximately 8 second intervals. The **PWR FAIL** indicator should turn on at 10.1 ± 0.1 volts and the incubator power should turn off. The audible alarm should sound continuously. If these alarms turn on at incorrect voltages, see the Control Board Calibration procedure.

9. Turn the incubator power off and disconnect the external supply. Reconnect the negative battery cable to the battery. Connect one end of the red clip lead to **TP7** of the control board and run the other end outside the incubator. Similarly, connect one black clip lead to **TP1** and one black clip lead to **TP2** of display board. Disconnect the sensor simulator from **J2** on the control board and connect the airflow tray cable to **J2** on the control board. Connect heater and ground wires also. Install the inner and outer infant chambers.

10. Using the calibrated temperature measuring device, monitor the temperature in the center of the chamber 10 cm above the center of the mattress.

11. Reconnect the incubator to an appropriate source of AC power and turn the unit on. Adjust the setpoint temperature to 37.0° C. Operate the unit until the temperature inside the infant chamber stabilizes (approximately 30 minutes).

12. If the temperature indicated by the monitoring instrument is not 37.0 ± 0.5° C, adjust **R3** on the control board until 37.0° C is achieved. This adjusts for the temperature offset between 10 cm above the center of the mattress and the location of the control temperature sensor.

13. Wait 10 minutes and repeat the previous step if necessary.

14. Adjust **R9** until the incubator displayed temperature matches the measured temperature of the measuring device, ± 0.5° C. Operate the incubator long enough to allow the displayed temperature to stabilize and adjust **R9** again as needed.

15. Wait 10 minutes and repeat the previous step, if necessary.

16. Use the two black clip leads to connect the 10 kΩ resistor between **TP1** and **TP2** on the display board, while the setpoint temperature is set at 37.0° C. (This effectively sets the temperature to 39.9° C). Verify that the **HIGH TEMP** alarm activates at 38.5 ± 0.1° C as indicated by the front panel display. The alarm should sound at approximately 8 second intervals. Adjust **R8** on the control board as necessary.

17. As the temperature in the chamber continues to rise, verify that the **SYS FAIL** alarm activates at 39.0 ± 0.2° C and that the heater is disabled (incubator cools gradually). Adjust **R7** on the control board as necessary. If this adjustment seems to have no effect, check that the secondary **SYS FAIL** isn't activating at too low a temperature (see step 18).

18. With the other black clip lead, ground **TP7** on the control board by clipping on to the chassis. The **SYS FAIL** alarm should turn off. Verify the **SYS FAIL** alarm reactivates at 39.2 ± 0.1° C, and that the heater is again disabled. Adjust **R15** on the control board as necessary. This **SYS FAIL** alarm should continue to be active even though the incubator cools below 39.2° C - the incubator must be turned off, then back on, to cancel it.

19. Remove all clip leads. Allow time for the unit to re-establish equilibrium.

20. Disconnect the power cord. The **BAT OP** indicator should illuminate. The **MUTE** button will cancel the **AC FAIL** alarm. Operate the unit from battery power for five minutes and verify that the temperature maintained is the same as with AC operation.

21. Connect an external source of 12V DC power to the external 12V DC connector. The **DC OP** indicator should illuminate. Verify temperature is maintained while powered from external DC for five minutes. Disconnect the external power supply and turn the unit off.

CONTROL BOARD CALIBRATION PROCEDURE

The following procedure should be used to calibrate the control board with it installed in the transport incubator, after any repairs, prior to system calibration.

NOTE: *TP11 and TP13 are ground references.*

CAUTION: The incubator electronics contain static sensitive components that can be damaged by improper handling. Use approved grounding techniques for work areas and service personnel.

1. Disconnect the AC power cord from any AC power source. Connect the temperature sensor test circuit to **J2** of the control board. Ensure **JP1** on the control board is set to route the Secondary Thermistor to the Display Board's "measured temperature" input (jumper **JP1** should be on positions 1 and 3). Connect the decade box to the temperature sensor test circuit. Set the temperature sensor test circuit switches as follows:

   a. Set the secondary sensor switch to DECADE BOX position.

   b. Set the primary sensor switch to 1400 Ω position.

   c. Set the decade box to 1454 Ω (37.0° C).

2. Reconnect the AC power cord to an appropriate AC power source. To set the battery charging voltage, turn off the incubator power switch and check the voltage at ***TP1***. With a fully charged battery, ***TP1*** should be 13.7 ± 0.05 volts. Adjust ***R1*** as necessary.

   a. To check the maximum charging current, measure the voltage from ***TP14*** to ***Z4*** pin 7. The voltage should be approximately 50 ± 10 millivolts.

      NOTE: *This maximum current is supplied to a discharged battery. The charging circuit automatically reduces this current for a charged battery. Be sure to check the current using a depleted battery, or with a 1.3 Ω, 100 W resistor in place of the battery.*

   b. Turn the incubator power switch to on and allow 10 minutes for the voltage references to stabilize.

c. To check the two independent voltage references, measure the voltage at ***TP4*** and ***TP10***. The voltage should be 5.00 ± 0.005 volts. If necessary, adjust ***R4*** and ***R10*** respectively.

d. To check the calibration of the setpoint temperature circuit, adjust the setpoint temperature to 37.0° C. With a properly calibrated display board, the voltage at ***TP2*** should be 3.399 ± 0.005 volts. Adjust ***R2*** on control board as necessary.

e. To check the calibration of the secondary temperature sensor, measure the voltage at ***TP9***. It should be 3.421 ± 0.005 volts. Adjust ***R9*** as necessary.

f. To check the ***SYS FAIL*** alarm, set the decade box to 1326 Ω. The ***SYS FAIL*** alarm should activate at 39.2° C (when switching from 1325 Ω to 1326 ± 100 Ω). Adjust ***R15*** as necessary. Achieving the exact temperature and ohm values is not critical now as this alarm will be readjusted more precisely during the system calibration.

g. Ensure ***JP1*** on the control board is set to route the Primary Thermistor to the Display Board's "measured temperature" input (jumper ***JP1*** should be on positions 1 and 2). Set the temperature sensor test circuit switches as follows:

   i. Primary sensor switch to DECADE BOX

   ii. Secondary sensor switch to 1400 Ω

   iii. Set the decade box to 1454 Ω (≈ 37.0° C).

h. To check the primary sensor calibration, measure the voltage at ***TP3***. It should be 3.399 ± 0.005 volts. Adjust ***R3*** as necessary.

i. Set the decade box to 1356 ± 100 Ω. The ***HIGH TEMP*** alarm should activate at 38.5° C when switching from 1356 to 1355 ± 100 Ω. Adjust ***R8*** as necessary. Achieving the exact temperature and ohm values is not critical now, as this alarm will be readjusted more precisely during the system calibration.

3. Set the decade box to 1329 ± 100 Ω (the HIGH TEMP alarm will be on). The ***SYS FAIL*** alarm should activate while switching at 39.0° C (when switching from 1329 to 1328 ± 100 Ω. Adjust ***R7*** as necessary. Achieving the exact temperature and ohm values is not critical now, as this alarm will be readjusted more precisely during the system calibration.

4. Turn off the incubator and unplug the AC cord. Remove the negative lead from the battery post. Connect the variable DC supply in place of the battery.

5. Adjust the voltage of the DC supply to 18.3 ± 0.05 volts. Connect a jumper across ***R59***. (***R59*** is located 1.5 inches below variable resistor ***R7***.) Set the decade box to 1576 Ω. Turn the incubator power switch on. Observe the waveform at ***TP12*** with an oscilloscope. The duty cycle of the square wave should be 60 ± 5%. Adjust ***R12*** as necessary. Verify that the period is between 14 ms and 16 ms. Disconnect the jumper on ***R59***.

6. Decrease the voltage output of the DC supply to 10.5 volts. The low battery alarm should activate.

7. Slowly decrease the applied voltage until the display turns off and the ***PWR FAIL*** indicator illuminates. This should occur at 10.1 ± 0.3 volts. If it does not, perform one of the following procedures:

   a. If the shutdown occurs <u>below</u> 10.1 volts do the following:

      i. Increase the applied voltage to 12.0 volts.

      ii. Cycle the power switch to off, then to on.

      iii. Adjust the applied voltage to 10.1 volts.

      iv. Slowly adjust ***R6*** clockwise until the display just shuts down.

   b. If the shutdown occurs <u>above</u> 10.1 volts, do the following:

      i. Increase the applied voltage to 12.0 volts.

      ii. Cycle the power switch to off, then to on.

      iii. Adjust ***R6*** fully counter clockwise.

      iv. Adjust the applied voltage to 10.1 volts.

      v. Slowly adjust ***R6*** clockwise until the display just shuts down.

      vi. Turn off power and remove the DC supply and reconnect the battery.

      vii. Return ***JP1*** to its original position (pins 1 and 3).

      viii. Remove all test apparatus and reassemble unit. Proceed to the System Calibration.

8. Perform the System Calibration procedure.

DISPLAY BOARD CALIBRATION PROCEDURE

The following procedure should be used to calibrate the display board. It should be performed once installed in the incubator, after any repairs, and prior to system calibration.

CAUTION: The incubator electronics contain static sensitive components that can be damaged by improper handling. Use approved grounding techniques for work areas and service personnel.

1. Turn the power switch on and observe for a couple of seconds; all LEDs should be illuminated, all seven-segmented LED elements turned on, and the audible alarm is on.
2. Verify ***TP3*** (relative to ***TP13***) is 5.0 ± 0.1 volts.
3. Adjust ***R36*** for a voltage of 1.809 ± 0.005 volts from ***TP4*** to ***TP13***.
4. Attach decade resistor box across the ground and input lugs of the skin temperature connector. Set decade resistor box to 1.355 Ω. Adjust ***R30*** for a reading of 3.399 ± 0.005 volts from ***TP5*** to ***TP11***. The display should show a reading of 37.0 ± 0.1° C when the ***BABY TEMP*** button is pushed.
5. Turn off the power. Remove all test apparatus.
6. Perform the System Calibration procedure.

SECTION 10: CIRCUIT DESCRIPTION

The theory of operation of the incubator's electronic circuits is described. The individual schematics for the control board and display board should be referred to when reading the theory of operation.

CONTROL BOARD

This section describes the theory of operation of the incubator's control board.

TEMPERATURE REGULATION

The air inside the incubator is heated and its temperature is sensed by the components of the air flow tray. The air flow tray contains the circulating fan, the temperature sensors, the heater, and the heater switching transistor. The heater power is controlled with pulse width modulation. There are two separate thermistors in the airflow tray. The first or primary thermistor is used to measure and control the incubator's temperature. The second or secondary thermistor is used for display control and an independent indicator of high temperature.

On the incubator control board are three identical temperature sensor circuits (***Z3B***, ***Z9B***, ***Z10B***, and their associated components). Two of these circuits (***Z3B*** and ***Z10B***) convert the two thermistors' nonlinear resistance values into a voltage proportional to the temperature of the thermistors. The third bridge circuit (***Z9B***) converts the voltage output of the setpoint circuit on the display board into a voltage proportional to the temperature setting.

The difference between the measured temperature and the setpoint temperature is amplified by ***Z10A*** producing an error voltage. ***Z7B*** compares this error voltage to a triangular wave produced by a 555 timer oscillator circuit, ***Z5***, ***R60***, and ***C9***. This comparison produces a square wave, the duty cycle of which is proportional to the error voltage. This square wave is then used to drive the base of the heater switching transistor. Diode ***CR12*** limits the maximum value of the error voltage seen by comparator ***Z7B***. The transistor amplifier formed by ***Q4***, ***R54***, ***R55***, ***R56***, ***R57***, and ***C16***, causes this maximum value limit to decrease approximately as the square of the applied heater voltage. This results in a relatively constant maximum heater power even though the heater voltage may vary. The applied heater voltage will vary due to changing AC line conditions, varying states of charge of the internal battery, or variations in the external DC voltage.

Potentiometer ***R12*** adjusts the DC level of the triangular wave, which controls the relationship between error voltage and duty cycle. This allows ***R12*** to control maximum heater power. The diodes ***CR13*** and ***CR17*** allow the DC level of the triangular wave to be increased when the incubator is powered by AC power. When AC power is used, the applied heater voltage is larger than when battery power or external DC power is used. The higher DC level of the triangular wave results in lower duty cycle applied to the heater for a given error voltage.

FAILSAFE TEMPERATURE LIMIT

The secondary thermistor and its independent circuitry provide a fail-safe heater disable function. The secondary thermistor circuit is completely independent of the control loop. It has a completely separate voltage reference (***Z2***) and amplifier (***Z3B***). A comparator (***Z3A***) is adjusted by means of ***R15*** to activate when a voltage corresponding to a temperature of 39.2° C is reached. This turns off ***Q3***, which opens the relay ***K3***, and interrupts power to the heater. The ***SYS FAIL*** indicator will activate and the audible alarm will sound.

ALARMS

Four comparators monitor the voltage derived from the primary thermistor. Comparator ***Z11A*** activates if the voltage is greater than 5 volts, indicating a shorted thermistor. Comparator ***Z11D*** activates if the voltage is less than 0.9 volts indicating an open thermistor. Activation of either of these two comparators will turn on the ***SENS FAIL*** indicator, sound the audible alarm, and disable the heater by turning ***Q3*** off.

Comparator ***Z11B*** activates when a voltage corresponding to a temperature of 39° C is reached. This turns on the ***SYS FAIL*** indicator, sounds the audible alarm, and disables the heater.

Comparator ***Z11C*** activates when a voltage corresponding to a temperature of 38.5° C is reached. This turns on the ***HIGH TEMP*** indicator and enables ***Z13***, a 555 timer, which sounds an intermittent audible alarm. The 555 timer ***Z13*** is configured as an asymmetrical square wave oscillator. It establishes the repetition rate and duration of the intermittent audible alarm.

Comparator ***Z7A*** monitors the voltage level of the power source. If this voltage drops below 10.8 volts, battery operation is assumed and the ***LOW BAT*** alarm is turned on. ***Z13*** is also enabled causing the intermittent audible alarm to sound.

POWER FAIL ALARM

The ***PWR FAIL*** alarm activates when the battery voltage drops below 10 volts, causing ***Z1*** to turn off ***Q1***, which supplies the battery voltage. This removes all power from the control circuitry. The drain of ***Q1*** will go low which will turn ***Q2*** on. Transistor ***Q2*** then supplies power from the battery to sound the alarm and turn on the ***PWR FAIL*** indicator. Although the battery has insufficient power to operate the unit, it does have plenty of power to operate the alarm indicators. The unloaded battery voltage will rebound and exceed the 10 volt level, but because ***Q1*** is off, ***Z1*** is turned off and cannot turn ***Q1*** back on. This is a latched condition and can be changed only by cycling the power switch, or by application of an external power source.

Without the application of external power, turning the power switch off will charge a capacitor (***C3***) on the display board through ***R72***. Then when the power switch is turned on, this capacitor is switched to pin 8 of ***Z1***. This provides sufficient power to ***Z1*** to allow it to turn on ***Q1***, if the battery voltage is sufficient. When ***Q1*** turns on, power is then supplied to ***Z1*** through ***CR9***.

VOLTAGE REFERENCE

Operational amplifier ***Z9A*** amplifies the 0.2 volts reference generated by ***Z8***. Potentiometer ***R4*** adjusts the gain to provide 5 volts at pin 1 of ***Z9***, ***TP4***. This establishes the voltage reference for the control loop amplifier circuits and all alarm circuits except the fail-safe circuit. The voltage reference for the fail-safe circuit is generated by ***Z2*** and adjusted by means of ***R10*** to be 5 volts at ***TP10***.

LAMP DRIVE CIRCUIT

Lamp power is regulated by maintaining a constant current through the lamp. A voltage reference within ***Z8*** provides 0.2 volts at pin 1 which is connected to pins 8 and 3. The amplifier drives the base of ***Q7*** to a voltage that causes the voltage at ***Z8*** pin 2 to be 0.2 volts. The constant voltage across the resistance of ***R38*** generates a constant current in the emitter of ***Q7*** and the emitter and collector currents are approximately equal. Therefore, the collector or lamp current is constant and regulated at 0.42 amps. The constant current drive provides the soft start effect when the lamp is turned on.

BATTERY CHARGER

The battery charger is powered any time the incubator is plugged into a source of AC power. The charger maintains a constant output voltage of 13.7 volts in the trickle charge mode or limits the charge current to 5 amps in the current mode. A fully charged battery has a voltage between 13.5 volts and 13.8 volts. The voltage regulator for the battery charger consists of ***Q5***, ***Z6***, and its associated components. A 200 millivolt reference within ***Z6*** establishes the voltage at the noninverting input of ***Z6***. The amplifier output drives ***Q5*** at the level necessary to cause the voltage at the inverting input of ***Z6*** to be equal to the reference voltage. By adjusting the potentiometer ***R1***, the ratio of the voltage divider string ***R32***, ***R1***, and ***R34*** can be varied to set the voltage at ***TP1*** to equal 13.7 volts.

The battery charging is interrupted when the heater is on to prevent excessive current draw on the transformer. This is accomplished by means of ***R35*** and ***CR15***. When the heater on signal at ***TP12*** goes high, the heater is turned on and causes a current through ***R35***. The current increases the voltage at the inverting input of ***Z6*** to exceed the 200 millivolt reference level, causing ***Z6*** to turn off ***Q5***. During the portion of the duty cycle when the heater signal at ***TP12*** output is low, the heater is turned off and battery charging resumes. Battery charging will be totally interrupted if the duty cycle of the heater reaches 100%. With average line voltages the maximum duty cycle is limited to less than 65%. When the battery is depleted, maintaining a voltage of 13.7 volts at ***TP1*** would force a charging current high enough to damage the battery. Therefore, a current limiting circuit is provided. This circuit is formed by ***Q6***, ***Z4***, and associated components. Zener diode ***CR14*** establishes a reference voltage and the potentiometer ***R14*** is adjusted to provide a reference of negative 50 millivolts at ***TP14*** with respect to the AC rectified voltage. The resistor ***R28*** is connected to the AC rectified voltage and supplies the battery charging current. As long as the voltage across ***R28*** is less than 50 millivolts or the charging current is less than 5 amps, ***Z4*** keeps ***Q6*** turned off. When the voltage across ***R28*** exceeds 50 millivolts, ***Z4*** causes the drain current of ***Q6*** to be increased until the voltage drop across ***R27*** matches the voltage drop across ***R28***. The drain current of ***Q6*** flows through ***R34*** producing an additional voltage to the inverting input of ***Z6***. The output of ***Z6*** responds by lowering the voltage to ***Q5*** and the battery charging current. The control loop responds to current rather than voltage and regulates to maintain a constant current of 5 amps. The current regulation is maintained until the battery terminal voltage rises sufficiently to cause ***TP1*** to rise above 13.7 volts and voltage regulation resumes.

SECTION 10: CIRCUIT DESCRIPTION

POWER SOURCE SELECTION

Relays ***K1*** and ***K2*** are arranged by means of their contact and drive coil connections to select the proper power source. AC power is the preferred source and is selected when the only external power applied is AC. It is also selected when both external DC and AC are applied. External DC is selected only when it is applied exclusively. When no external source of power is applied, the relays select the internal battery.

DISPLAY BOARD

This section details the functions provided by the circuitry on the display board. Microcontroller ***U4*** is the chief component of the incubator display portion of the board. When powered on, dedicated firmware processes key inputs received from the membrane switch panel; continuously monitors the incubator air temperature, skin temperature, and battery voltage inputs; selects and updates the seven-segment digits, display mode LEDs, and temperature setpoint; and provides nonvolatile memory to restore system settings when power is cycled.

Meanwhile, microcontroller ***U19*** is the chief component of the pulse oximeter and oxygen monitor. When powered on, dedicated firmware processes key inputs received from the membrane switch panel and continuously monitors the oxygen content and serial communications from the pulse oximetry board. It continuously selects and updates the seven-segment digits for %SpO_2, Pulse, and Oxygen concentration, as well as the pulse bar graph and the pulse-oximeter / oxygen display mode LEDs. It provides early warning for too low of a low oxygen alarm setpoint and drives the alarm output. It also provides nonvolatile memory to restore system settings when power is cycled.

MEASURED TEMPERATURE DISPLAY

The seven-segment display LEDs (***DS1***, ***DS2***, and ***DS3***) and the display mode LEDs (***D53***, ***D54***, ***D55***, and ***D56***) are updated at 200 Hz and are driven by current source array ***U11***. This refresh rate is established by the microcontroller, which activates the common cathodes for each display component using open collector Darlington array ***U10***.

SECTION 10: CIRCUIT DESCRIPTION

MAIN INCUBATOR ALARM AND POWER INDICATORS

Of the twelve remaining alarm and indicator LEDs for the incubator, nine are driven by ***U8*** and ***U9***, which are open collector Darlington arrays. Two indicators (***BAT CHG*** and ***PWR FAIL***) are driven directly since they must operate when the incubator power is turned off. One indicator (>37° C) is driven by the microcontroller through open collector Darlington array ***U10***. The audible alarm is turned on as determined by logic on the control board. The audible alarm can be silenced for approximately 60 seconds by pressing the ***MUTE*** button. This charges ***C13*** raising the voltage above the reference voltage generated by ***R25*** and ***R27***. The comparator ***U14-B*** compares these voltages and turns off ***Q3***, which turns off the audible alarm until the ***C13*** discharges through ***R26***. It also turns off an input to U10, which in turn turns on an input to U10, thus causing the alarm muted LED to come on. The ***MUTE*** button is overridden by a ***PWR FAIL*** alarm turning on ***Q5***.

TEMPERATURE SETPOINT

The temperature setpoint is entered from the membrane keypad as described in the Operator's Manual. The microcontroller firmware then converts this setpoint to a voltage output, which is written to the serial digital-to-analog converter ***U6***. This voltage in turn controls the current across fixed resistor ***R16*** (inserted between ***TP1*** and ***TP2***) and thereby emulates the passive resistor model of an ordinary thumbwheel switch. The equivalent resistance is input to a temperature sensor circuit on the control board. The microcontroller ***U4*** also monitors the voltage out of ***U6*** directly to guard against any failure in the temperature setpoint circuit.

SETPOINT ALARM

This alarm activates when the incubator temperature is more than 1° from the setpoint. The display will flash HI or LO every 5 seconds. An audio alarm sounds every minute until the incubator temperature is within 1° of the setpoint.

PULSE, SpO_2, AND OXYGEN DISPLAYS (OPTIONAL FEATURES)

The seven-segment display LEDs (***DS20*** - ***DS28***), the pulse-oximeter / oxygen display mode LEDs (***D38*** - ***D44***), and the pulse bar graph LEDs (***D45 - D49***) are updated at 120 Hz by the microprocessor on the display daughter card. The oxygen low setpoint below 21% warning LEDs (***D35 - D36***) is also driven by the microprocessor on the display daughter card.

SATURATION, PULSE, OXYGEN, AND PULSE GRAPH DISPLAYS (OPTIONAL FEATURES)

The seven-segment display LEDs (***DS20*** - ***DS28***), the display mode LEDs (***D38*** - ***D44***), and the horizontal bar graph of the pulse amplitude (***D45*** - ***D49***) (all located on the main display board) are updated at 120 Hz and are driven by current source array ***U21***. This refresh rate is established by the microcontroller, which activates the common cathodes for each display component using open collector Darlington array ***U12*** and ***U20***, with some of the selection done via the 3 to 8 line decoder ***U23***.

ALARM AND POWER INDICATORS (OPTIONAL FEATURES)

The low oxygen limit below 21% warning LED and the alarm are driven by ***U12***. The alarm is the same one as is used by the incubator so the mute circuitry will shut down all audible alarms.

ALARM SETPOINTS (OPTIONAL FEATURE)

The high and low alarm levels are entered from the membrane keypad as described in the Operator's Manual. The microcontroller firmware then compares the setpoints to the serially communicated inputs from the pulse oximetry board and the serial data from the analog to digital converter, which is in turn connected to an instrumentation amplifier with a gain of 1 on the oxygen reading level. These setpoints are stored in the EPROM included in the microprocessor ***U19***.

SETPOINT ALARM (OPTIONAL FEATURE)

This alarm activates when any reading is greater than its respective high setpoints or lower than its low setpoint. The display will flash HI or LO in the appropriate display at a rate as determined by the alarm severity. An audio alarm sounds three times every three seconds for a medium priority alarm, and two times every three seconds for a low priority alarm until the incubator alarming condition is removed or the incubator is turned off.

OTHER ALARM AND WARNING CONDITIONS

All alarm conditions including error codes are detailed in the operator's manual and in SECTION 7 of this Service manual.

GENERAL MECHANICAL SPECIFICATIONS

	Height inches (cm)	Width inches (cm)	Depth inches (cm)	Weight lbs. (kg)
A750i Incubator and Chamber with Cart	48.3 (122.6)	50 (127)	24 (61)	166.5 (75)

Mattress Tray Dimensions	11 ¾ × 23 ¾ × 1 in	29.8 × 60.3 × 2.5 cm
Infant Chamber Vertical Clearance	9 in	22.9 cm
Front Access Door with 2 Hand Ports	8 × 22 ¼ in	20.3 × 56.5 cm

NOTE: *Dimensions and weights are approximate. Height dimensions are given such that, when added, the approximate total height is given.*

Mounting Provisions

Four 3/8-16 UNC mounting holes on the bottom of the incubator are intended to be utilized to mount the incubator to an interface that will securely fix the incubator system in a hospital setting as appropriate. It is the customer's responsibility to ensure that any safety requirements have been addressed on the installation. Unless otherwise specified, maximum additional equipment weight limited to 10 lbs.

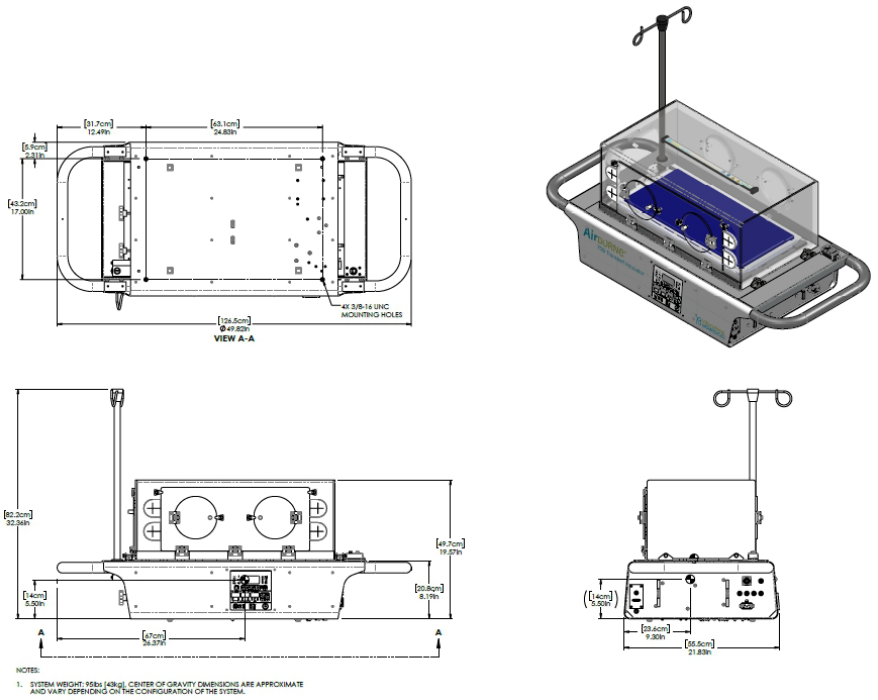

Figure 11 - 1

ELECTRICAL SPECIFICATIONS

AC Power	120 VAC, 50 - 400 Hz, 3 Amps
	230 VAC, 50 - 400 Hz, 3 Amps
External DC Power	12 volts 10 Amps
Internal Battery	One 12 volt 26 AH Sealed Lead/Acid type
Battery Life	Approx. 200 cycles
Nominal Battery Recharge (90%) Time	8 Hr. on AC, Unit Off
Nominal Battery Operation Time	3 Hr. Chamber at 37° C Ambient 20° C
Examination Light	5 Watt

OPERATIONAL SPECIFICATIONS

Temperature Setpoint	17° C to 38.9° C, 0.1° C increments
Digital Display Resolution	0.1° C
Digital Display Accuracy	± 1° C in range 10° to 45° C
Warmup time[2]	20 minutes ± 20%, large chamber
Carbon dioxide concentration[3]	< 0.5%
Maximum Infant Weight	16 lb (7.3 kg)
Display update period	1 second

EMC SPECIFICATIONS

EMC Compliance

The Transport Incubator has been tested and found to comply with limits for electromagnetic interference and suseptibility as defined by IEC 60601-1-2. However, this equipment may radiate radio frequency (RF) energy and may cause harmful interference to other devices. The Transport Incubator is intended for use in an electromagnetic environment in which radiated RF disturbances are controlled. The customer or the user of the Transport Incubator can help prevent electromagnetic interference by operating the device in the environments and with the minimum separation distances specified in the Service Manual. Additionally, periodic maintenance as specified by International Biomedical will allow the device to continue to provide basic safety and essential performance.

[2] As determined by EN60601-2-20, clause 201.12.1.107. Time to rise 11° C, when control temperature is set 12° C above ambient.

[3] As determined by EN60601-2-20, clause 201.12.4.2.101. Measured 15 cm from 4% CO_2 mixture administered at rate of 750 ml/min, 10 cm above center of mattress.

GUIDANCE AND MANUFACTURER'S DECLARATION - EMISSIONS

The Transport Incubator is intended for use in the electromagnetic environment specified below. The customer or user of the Transport Incubator should ensure that it is used in such an environment.

EMISSIONS TEST	COMPLIANCE	ELECTROMAGNETIC ENVIRONMENT - GUIDANCE
RF Emissions CISPR 11	Group 1	The Transport Incubator uses RF energy only for its internal function. Therefore, its RF emissions are very low and are not likely to cause any interference in nearby electronic equipment.
Conducted Emissions CISPR 11	Class B	The Transport Incubator is suitable for use in all establishments, including domestic, and those directly connected to the public low-voltage power supply network that supplies buildings used for domestic purposes.
Harmonics IEC 61000-3-2	Class A	
Flicker IEC 61000-3-3	Complies	

GUIDANCE AND MANUFACTURER'S DECLARATION - IMMUNITY

The Transport Incubator is intended for use in the electromagnetic environment specified below. The customer or user of the Transport Incubator should ensure that it is used in such an environment.

IMMUNITY TEST	IEC 60601 TEST LEVEL	COMPLIANCE LEVEL	ELECTROMAGNETIC ENVIRONMENT - GUIDANCE
ESD IEC 61000-4-2	± 8 kV Contact ± 15 kV Air	± 8 kV Contact ± 15 kV Air	Floors should be wood, concrete, or ceramic tile. If floors are synthetic, the r/h should be at least 30%.
EFT IEC 61000-4-4	± 2 kV Mains ± 1 kV I/Os	± 2 kV Mains ± 1 kV I/Os	Mains power quality should be that of a typical commercial or hospital environment.
Surge IEC 61000-4-5	± 1 kV Differential ± 2 kV Common	± 1 kV Differential ± 2 kV Common	Mains power quality should be that of a typical commercial or hospital environment.
Voltage Dips/Dropout IEC 61000-4-11	> 95% Dip for 0.5 Cycle 60% Dip for 5 Cycles 30% Dip for 25 Cycles > 95% Dip for 5 Seconds	> 95% Dip for 0.5 Cycle 60% Dip for 5 Cycles 30% Dip for 25 Cycles During the 5 Second event, the Transport Incubator switches to internal battery power.	Mains power quality should be that of a typical commercial or hospital environment. If the user of the Transport Incubator requires continued operation during power mains interruption, it is recommended that the Transport Incubator be powered from an uninterruptible power supply or internal battery.
Power Frequency 50/60 Hz Magnetic Field IEC 61000-4-8	30 A/m	30 A/m	Power Frequency magnetic fields should be that of a typical commercial or hospital environment.

GUIDANCE AND MANUFACTURER'S DECLARATION - IMMUNITY

The Transport Incubator is intended for use in the electromagnetic environment specified below. The customer or user of the Transport Incubator should ensure that it is used in such an environment.

IMMUNITY TEST	IEC 60601 TEST LEVEL	COMPLIANCE LEVEL	ELECTROMAGNETIC ENVIRONMENT - GUIDANCE
Conducted RF IEC 61000-4-6	3 Vrms 150 kHz to 80 MHz (AC/DC) 6 Vrms (in ISM Bands between 150 kHz and 80 MHz)	3 Vrms 150 kHz to 80 MHz (AC/DC) 6 Vrms (in ISM Bands between 150 kHz and 80 MHz)	Portable and mobile communications equipment should be separated from the Transport Incubator by no less than the distances calculated/listed below: D= $\frac{3.5}{V_1}\sqrt{\mathbf{P}}$ D= $\frac{3.5}{E_1}\sqrt{\mathbf{P}}$ 80 to 800 MHz D= $\frac{7}{E_1}\sqrt{\mathbf{P}}$ 800 MHz to 2.5 GHz
Radiated RF IEC 61000-4-3	3 V/m 80 MHz to 2.5 GHz	(V_1) Vrms (E_1) V/m	Where P is the max power in watts and D is the recommended separation distance in meters. Field strengths from fixed transmitters, as determined by an electromagnetic site survey, should be less than the compliance levels (V1 and E1). Interference may occur in the vicinity of equipment containing a transmitter.
Proximity fields from RF Wireless Communication Equipment IEC 61000-4-3	See IEC 60601-1-2:2014 8.10	See IEC 60601-1-2:2014 8.10	This equipment should be placed no closer than 30 cm from the nearest RF Wireless communication device.

Equipment and Systems that are NOT Life-Supporting

RECOMMENDED SEPARATION DISTANCES BETWEEN PORTABLE AND MOBILE RF COMMUNICATIONS EQUIPMENT AND THE TRANSPORT INCUBATOR

The Transport Incubator is intended for use in the electromagnetic environment in which radiated disturbances are controlled. The customer or user of the Transport Incubator can help prevent electromagnetic interference by maintaining a minimum distance between portable and mobile RF Communications Equipment and the Transport Incubator as recommended below, according to the maximum output power of the communications equipment.

MAX OUTPUT POWER (WATTS)	SEPARATION (m) 150 kHz to 80 MHz D=(3.5/V1)(Sqrt P)	SEPARATION (m) 80 to 800 MHz D=(3.5/E1)(Sqrt P)	SEPARATION (m) 800 MHz to 2.5 GHz D=(7/E1)(Sqrt P)
0.01	0.12	0.12	0.23
0.1	0.37	0.37	0.74
1	1.17	1.17	2.33
10	3.69	3.69	7.38
100	11.67	11.67	23.33

Equipment and Systems that are NOT Life-Supporting

ESSENTIAL PERFORMANCE

- The accuracy of the set temperature to the real temperature will be maintained within ± 2° C at ambient temperatures between 10 and 20° C and within ± 1.5° C at an ambient temperature of 25° C ± 1° C for normal operation.
- In the event that the temperature is outside of the prescribed range, an audible alarm will be supplied.
- The warm up time for the incubator with large chamber, as defined by 60601-2-20 section 201.12.1.107 shall be 20 minutes* - as defined in our IFU.
- The indication of the temperature shall be accurate within 1° C when measured with a standard thermometer at a point 10 cm above the middle of the mattress.
- The O_2 Monitor shall be accurate within 2.5% + 2.5% of gas level (Volume Fraction of Gas Level).
- When the power supply falls outside of the normal values for operation, the incubator shall switch over to its internal battery, and shall display an indicator that the device is operating on battery power.
- For incubators equipped with SpO_2 capability, the SpO_2 accuracy shall be less than or equal to 4% over the range of 70-100% SaO_2.
- For incubators equipped with SpO_2 capability, the Pulse Rate accuracy shall be less than or equal to 5 bpm over the range of 25-240 bpm.
- For incubators equipped with SpO_2 capability, SpO_2 level low shall create an audible and visual alarm.
- For incubators equipped with SpO_2 capability, alarms shall be generated in the event of probe or patient cable failures, or if the SpO_2 system is incapable of updating the measured data for a period of 30 seconds.

PULSE OXIMETER SPECIFICATIONS (OPTIONAL FEATURE)

Range

Oxygen Saturation ---------- 1% - 100%

Pulse Rate ---------- 25-240 bpm

Perfusion Index (Masimo Only) ---------- 0.02% to 20%

Resolution

Oxygen Saturation ---------- 1%

Pulse Rate ---------- 1 bpm

Sensor Peak Wavelengths

Peak wavelength information may be useful to clinicians, such as those performing photodynamic therapy.

Masimo ---------- 660 nm (red light), 905 nm (infrared light)

Nellcor---------- 660 nm (red light), 900 nm (infrared light)

Sensor Maximum Power Output

Masimo ---------- less than 15 mW (at 50 mA pulsed)

Nellcor---------- less than 15 mW

***Masimo Sensor Accuracy*[4]**

During No Motion Conditions[5]

Oxygen Saturation - Neonates	70 - 100%	± 3%
	0 - 69%	unspecified
Oxygen Saturation - Pediatrics	70 - 100%	± 2%
	0 - 69%	unspecified
Pulse Rate - Neonates / Pediatrics	25 - 240 bpm	± 3 bpm

During Motion Conditions[6,7]

Oxygen Saturation - Neonates / Pediatrics	70 - 100%	± 3%
	0 - 69%	unspecified
Pulse Rate - Neonates / Pediatrics	25 - 240 bpm	± 5 bpm

Low Perfusion (where 0.02% Pulse Amplitude and % Transmission > 5%)[8]

Oxygen Saturation - Neonates / Pediatrics	± 2%
Pulse Rate - Neonates / Pediatrics	± 3 bpm

---

4 Masimo sensors have been validated for pulse rate accuracy for the range of 25 - 240 bpm in bench top testing against a Biotek Index 2 simulator. This variation equals plus or minus one standard deviation, which encompasses 68% of the population.

5 Masimo SET technology with LNCS sensors have been validated for no motion accuracy in human blood studies on healthy adult male and female volunteers with light to dark skin pigmentation in induced hypoxia studies in the range of 70-100% SpO_2 against a laboratory co-oximeter and ECG monitor. This variation equals plus or minus one standard deviation, which encompasses 68% of the population. The saturation accuracy of the neonatal sensors was validated on adult male and female volunteers with light to dark skin pigmentation and 1% was added to account for the properties of fetal hemoglobin.

6 Masimo SET technology with LNCS sensors has been validated for motion accuracy in human blood studies on healthy adult male and female volunteers with light to dark skin pigmentation in induced hypoxia studies while performing rubbing and tapping motions, at 2 to 4 Hz at an amplitude of 1 to 2 cm and a non-repetitive motion between 1 to 5 Hz at an amplitude of 2 to 3 cm in induced hypoxia studies in the range of 70-100% SpO_2 against a laboratory co-oximeter and ECG monitor. This variation equals plus or minus one standard deviation, which encompasses 68% of the population.

7 The Masimo SET Technology with LNCS Neo sensors has been validated for neonatal motion accuracy in human blood studies on healthy adult volunteers in induced hypoxia studies while performing rubbing and tapping motions, at 2 to 4 Hz at an amplitude of 1 to 2 cm and a non-repetitive motion between 1 to 5 Hz at an amplitude of 2 to 3 cm in induced hypoxia studies in the range of 70-100% SpO_2 against a laboratory CO-oximeter and ECG monitor. 1% has been added to the saturation accuracy to account for the effects of fetal hemoglobin. This variation equals plus or minus one standard deviation, which encompasses 68% of the population.

8 Masimo SET technology has been validated for low perfusion accuracy in bench top testing against a Biotek Index 2 simulator and Masimo's simulator with signal strengths of greater than 0.02% and a % transmission of greater than 5% for saturations ranging from 70 to 100%. This variation equals plus or minus one standard deviation, which encompasses 68% of the population.

Nellcor Sensor Accuracy[9,10]

Oxygen Saturation (70-100% range) ---------- ± 2% (OxiMax adhesive sensors)

Oxygen Saturation (60-80% range) ---------- ± 3% (MAX sensors)

Pulse Rate ---------- 20 - 240 bpm ± 3 bpm

Interfering Substances

Carboxyhemoglobin may erroneously increase readings. The level of increase is approximately equal to the amount of carboxyhemoglobin present. Dyes, or any substance containing dyes, that change usual arterial pigmentation may cause erroneous readings.

OXYGEN MONITOR SPECIFICATIONS (OPTIONAL FEATURE)

Measurement Range ---------- 10.0% to 100%

Resolution ---------- 0.1%

Response Time ---------- < 16 seconds for 90% response
< 25 seconds for 97% response

Accuracy ---------- ± 4.0% over measurement range

Stability ---------- Less than 2% drift over 8 hours at constant temperature and pressure

Required Sample Flow ---------- Minimal 3cc/minute, 100cc/minute typical

Operating Temperature ---------- 5° to 40° C (31 - 104°F)

INTERFERING SUBSTANCES

Interferent	Volume % Dry	Interference in Oxygen Reading
Nitrous Oxide	75%	< 2%
Carbon Dioxide	10%	< 2%
Halothane	5%	< 2%
Enflurane	5%	< 2%
Isoflurane	5%	< 2%
Helium	70%	< 2%
Sevoflurane	6%	< 2%
Desflurane	15%	< 2%

[9] The NELL-1 PulseOximeter board has been validated, in part, by studies conducted on healthy adult male and female volunteers, spanning a range of skin pigmentations and ranging in age from 18-50 years old, under controlled laboratory conditions over the saturation range of 70% to 100%. SpO_2 was compared to SaO_2 measured to blood CO-oximetry, and pulse rate was compared to EKG heart rate. Clinical functionality has been demonstrated on a population of hospitalized neonate and infant patients (MAX sensors: 1-23 days old, weight from 750-4100 grams, Softcare sensors: 24-40 weeks old, weight from 710-5000 grams).

[10] The NELL-1 PulseOximeter board has been validated for low perfusion accuracy using signals supplied by a patient simulator. SpO_2 and pulse rate values were varied across the monitoring range over a range of weak signal conditions and compared to the known true saturation and pulse rate of the input signals.

OPERATING, STORAGE, AND TRANSPORT ENVIRONMENT

The infant transport incubator requires the following environmental conditions for transport and storage:

Temperature ---------- -15° C to 40° C
Humidity ---------- 10% to 95% non-condensing
Pressure ---------- 50 kPa to 106 kPa

The requirements of the International Standard, EN60601-2-20:2009 are met. The environment, if not further specified in the standard, is:

Temperature ---------- 21° C to 25° C
Humidity ---------- 45% to 75% non-condensing
Pressure ---------- 86 kPa to 106 kPa

SECTION 12: WARRANTY

Unless otherwise specified, International Biomedical warrants all products of its manufacture at the time of shipment to be free from defects of material and workmanship for a period of twelve months from the date of shipment when owned by the original purchaser. Any product which is believed to be defective, if returned within twelve months after date of shipment by the Company with freight prepaid and found by the Company's inspection to be defective within the terms of this warranty, will be repaired or replaced free of charge and shipped, freight prepaid, to any point in the United States. If inspection by the Company of any such product does not disclose any defect within the terms of this warranty, the Company's regular charges for repairs or replacement and freight shall apply. All consumable and disposable products are guaranteed to be free from defects upon shipment only. The warranty period for batteries is limited to 90 days from date of shipment.

This warranty specifically excludes and replaces all other express and implied warranties. The Company shall have no liability under any warranty in any amount greater than the Company receives for the sale of the product involved. The use and manner of use of the Company's products shall be the responsibility of the purchaser and the purchaser covenants and agrees to indemnify and save harmless the Company in respect to any loss and damage that may arise through the use by the purchaser, or others, of any of the Company's products.

This warranty is rendered void and International Biomedical cannot be held liable for conditions resultant therefrom if:

1. Damage to the unit is incurred as a result of mishandling.
2. The customer fails to maintain the unit in a proper manner.
3. The customer uses any parts, accessories, or fittings not specified or sold by International Biomedical.
4. Sale or Service is performed by a non-certified service / dealer agency or any other unauthorized agency.

All shipping claims must be made within 30 days from date of shipment from International Biomedical; otherwise factory will not be liable for claims of missing items. Any item ordered in error and returned to the factory for credit, will be subject to a minimum restocking charge of 15%. Requests for returning items must be made within 30 days of factory shipment date.

International Biomedical will accept no returned goods without a Returned Goods Authorization number (RGA) obtained from Customer Service Department.

EUROPEAN REGULATORY AFFAIRS REPRESENTATIVE

The authorized regulatory affairs representative in Europe for the incubator is:

Emergo Europe
Westervoortsedijk 60
6827 AT
Arnhem, The Netherlands

PARTS AND ACCESSORIES

Power Cords (vary depending on customer requirements)

216-0350	Strap, Infant Positioning - (Reorder PN 731-2950, Case of 20)
700-3409	409B Skin Temperature Probe, Reusable
711-1860	Cable, Oxygen Sensor to Side Panel
711-0022	Cable Assy, Patient, 10’, Masimo LNCS
711-1920	Cable Assy Patient, 10 Foot, Nellcor OxiMax
731-0004	Phototherapy Eye Shields, Small
731-9592	Cover, Thermal, Incubator - Large, Head and Foot Door

For general incubator assistance or for parts and accessories, contact:

International Biomedical
8206 Cross Park Drive
Austin, TX 78754

512-873-0033

www.int-bio.com

For information on Masimo pulse oximeter sensors and cables, contact:

Masimo Corporation
52 Discovery
Irvine, CA 92618

949-297-7000

www.masimo.com

For information on Nellcor pulse oximeter sensors and cables, contact:

Covidien
6135 Gunbarrel Avenue
Boulder, CO 80301

800-635-5267 or 303-530-2300

www.nellcor.com

THIS DOCUMENT CONTAINS PROPRIETARY INFORMATION AND IS LOANED IN CONFIDENCE SUBJECT TO RETURN UPON DEMAND ON THE EXPRESS CONDITION THAT IT WILL NOT BE USED IN ANY WAY NOT AUTHORIZED IN WRITING BY INTERNATIONAL BIOMEDICAL.

REVISION HISTORY			
REV	DESCRIPTION	DATE	APPROVED
A	NDR 2891	06/10/16	TE

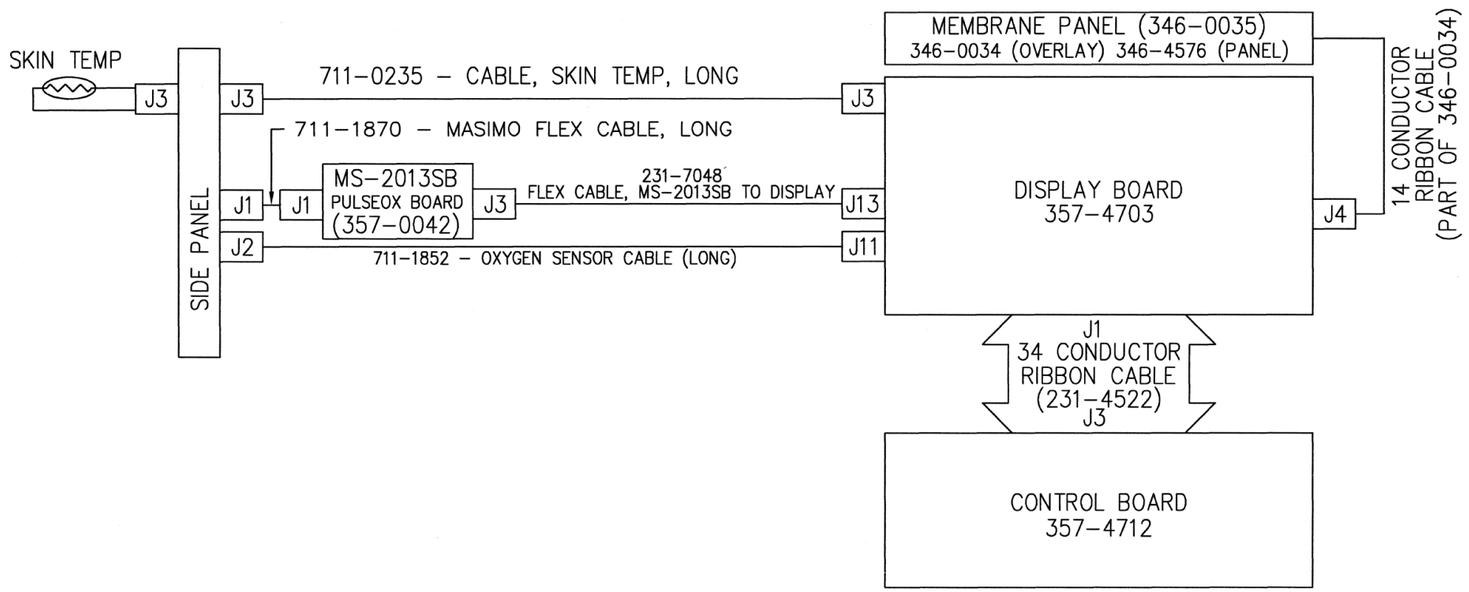

ORIGINAL

NEXT ASSY	USED ON
APPLICATION	

UNLESS OTHERWISE SPECIFIED DIMENSIONS ARE IN INCHES.
TOLERANCES ARE:
DECIMALS: .X ±.1, .XX ±.02, .XXX ±.010
ANGLES: ±1/2°
DO NOT SCALE DRAWING

APPROVALS		DATE
DRAWN	teh	052716
CHECKED	TE	060316
ENGR	TE	06/10/16

international BIOMEDICAL
8206 CROSS PARK DR. AUSTIN, TX 78754

TITLE SYSTEM WIRING DIAGRAM, MASIMO PULSEOX, A750i

SIZE	CAGE CODE	DWG NO.	REV
B		002-0011	A

SCALE NTS | SHEET 1 OF 1

THIS DOCUMENT CONTAINS PROPRIETARY INFORMATION AND IS LOANED IN CONFIDENCE SUBJECT TO RETURN UPON DEMAND ON THE EXPRESS CONDITION THAT IT WILL NOT BE USED IN ANY WAY NOT AUTHORIZED IN WRITING BY INTERNATIONAL BIOMEDICAL.

REVISION HISTORY			
REV	DESCRIPTION	DATE	APPROVED
A	NDR 2891	06/10/16	TE

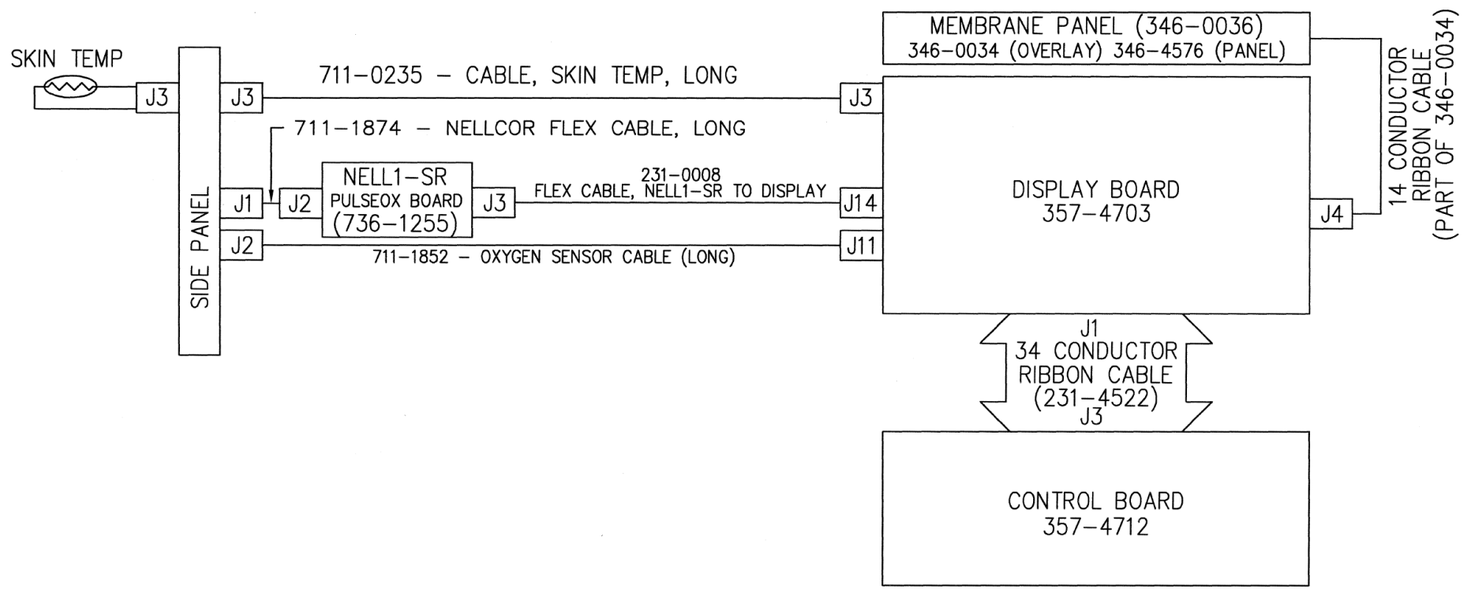

ORIGINAL

NEXT ASSY	USED ON
APPLICATION	

UNLESS OTHERWISE SPECIFIED DIMENSIONS ARE IN INCHES. TOLERANCES ARE:

DECIMALS	ANGLES
.X ±.1	±1/2°
.XX ±.02	
.XXX ±.010	

DO NOT SCALE DRAWING

APPROVALS		DATE
DRAWN	teh	052716
CHECKED	TE	060316
ENGR	TE	06/10/16

international BIOMEDICAL®
8206 CROSS PARK DR. AUSTIN, TX 78754

TITLE SYSTEM WIRING DIAGRAM, NELLCOR PULSEOX, A750i

SIZE	CAGE CODE	DWG NO.	REV
B		002-0014	A

SCALE NTS | SHEET 1 OF 1

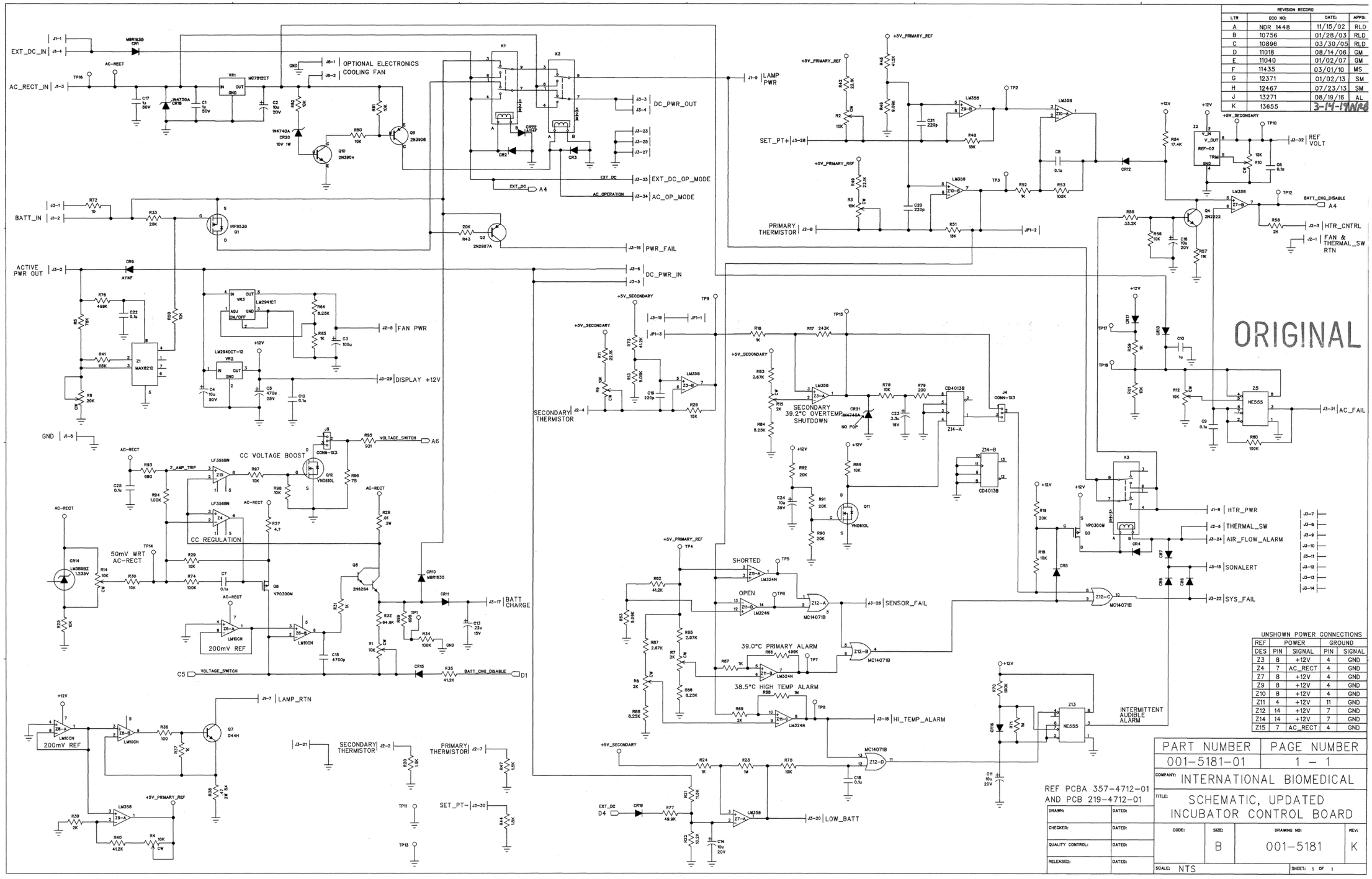

UNSHOWN POWER CONNECTIONS

REF DES	POWER PIN	POWER SIGNAL	GROUND PIN	GROUND SIGNAL
Z3	8	+12V	4	GND
Z4	7	AC_RECT	4	GND
Z7	8	+12V	4	GND
Z9	8	+12V	4	GND
Z10	8	+12V	4	GND
Z11	4	+12V	11	GND
Z12	14	+12V	7	GND
Z14	14	+12V	7	GND
Z15	7	AC_RECT	4	GND

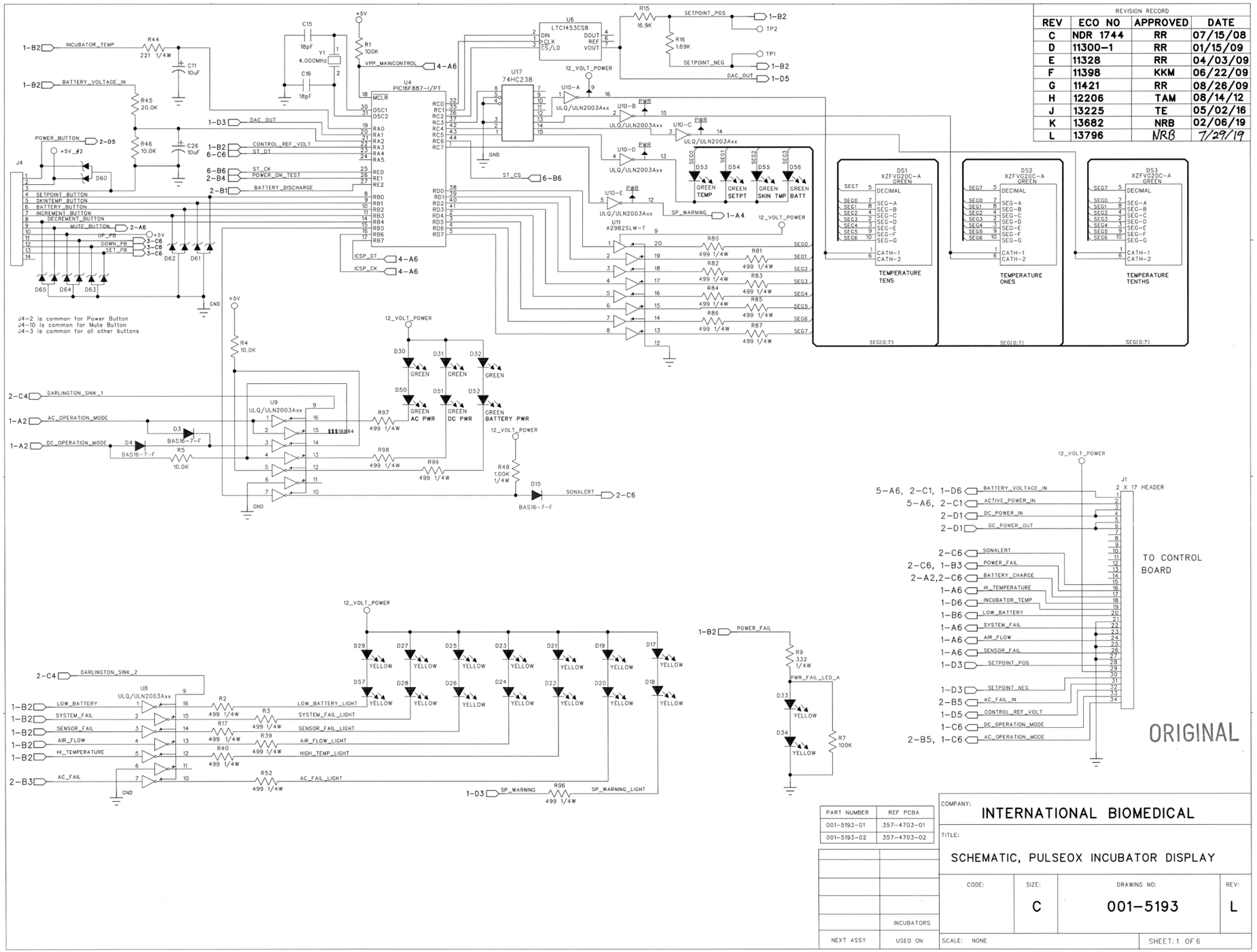
REVISION RECORD
REV ECO NO APPROVED DATE
C NDR 1744 RR 07/15/08
D 11300-1 RR 01/15/09
E 11328 RR 04/03/09
F 11398 KKM 06/22/09
G 11421 RR 08/26/09
H 12206 TAM 08/14/12
J 13225 TE 05/02/16
K 13682 NRB 02/06/19
L 13796 NRB 7/29/19
U4 PIC16F887-I/PT
U6 LTC1453CS8
U17 74HC238
U9 ULQ/ULN2003Axx
U8 ULQ/ULN2003Axx
U11 A2982SLW-T
DS1 XZFV520C-A GREEN
DS2 XZFV620C-A GREEN
DS3 XZFV220C-A GREEN
TEMPERATURE TENS
TEMPERATURE ONES
TEMPERATURE TENTHS
J4-2 is common for Power Button
J4-10 is common for Mute Button
J4-3 is common for all other buttons
J1 2 X 17 HEADER
TO CONTROL BOARD
ORIGINAL
PART NUMBER REF PCBA
001-5193-01 357-4703-01
001-5193-02 357-4703-02
NEXT ASSY
INCUBATORS
USED ON
COMPANY:
INTERNATIONAL BIOMEDICAL
TITLE:
SCHEMATIC, PULSEOX INCUBATOR DISPLAY
CODE:
SIZE:
C
DRAWING NO:
001-5193
REV:
L
SCALE: NONE
SHEET: 1 OF 6

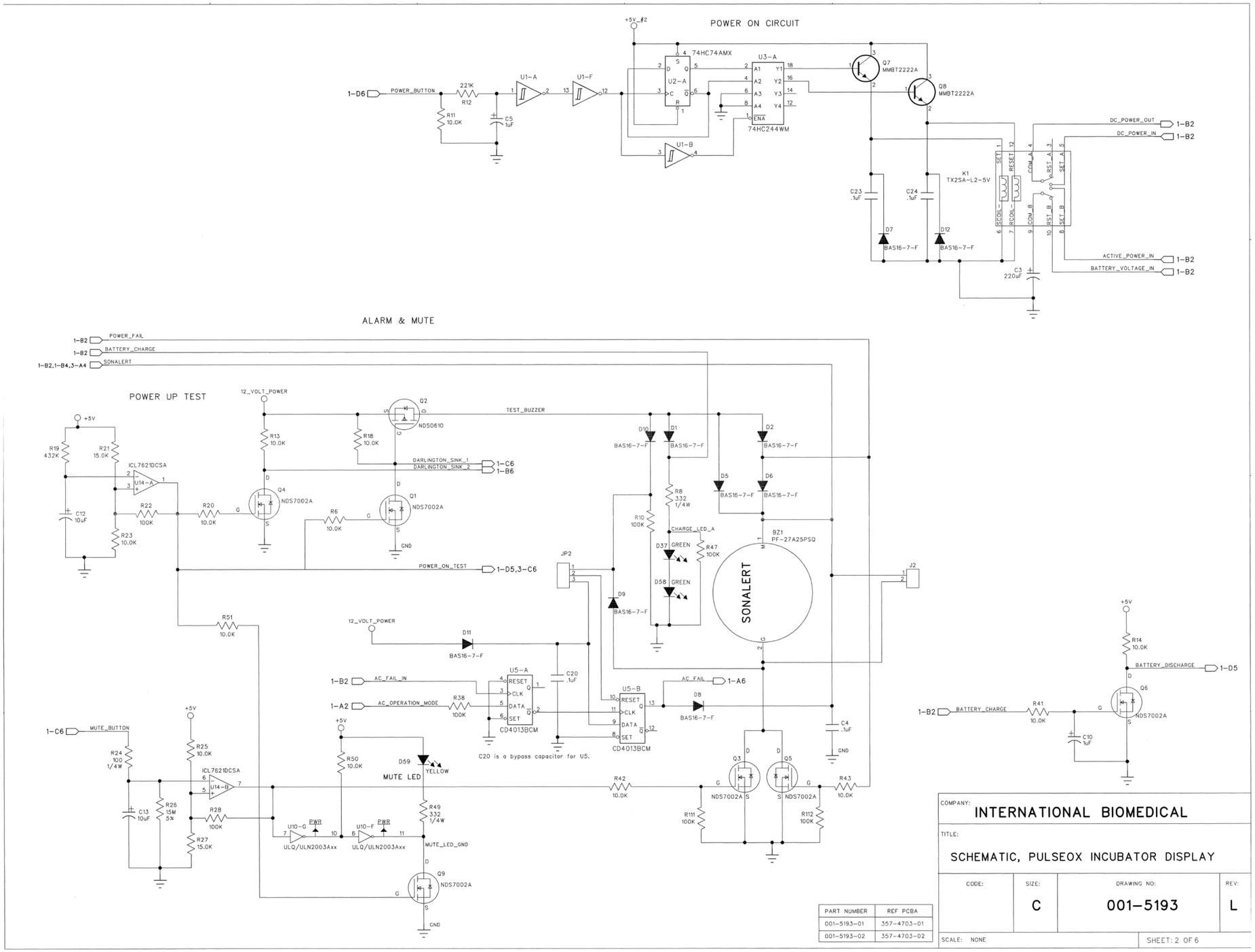
POWER ON CIRCUIT
ALARM & MUTE
POWER UP TEST
SONALERT
COMPANY: INTERNATIONAL BIOMEDICAL
TITLE: SCHEMATIC, PULSEOX INCUBATOR DISPLAY
CODE:
SIZE: C
DRAWING NO: 001-5193
REV: L
SCALE: NONE
SHEET: 2 OF 6
PART NUMBER | REF PCBA
001-5193-01 | 357-4703-01
001-5193-02 | 357-4703-02

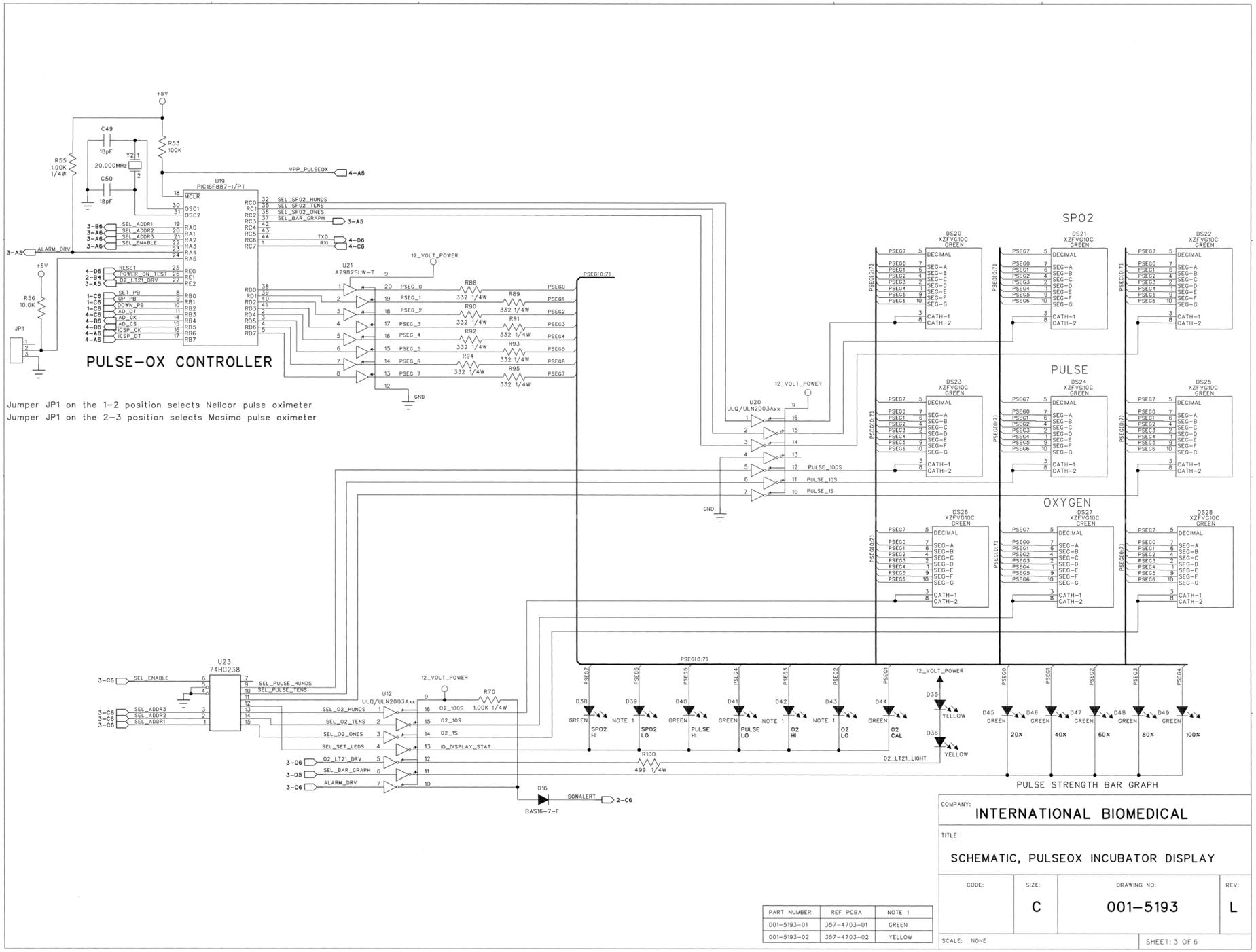

PART NUMBER	REF PCBA	NOTE 1
001-5193-01	357-4703-01	GREEN
001-5193-02	357-4703-02	YELLOW

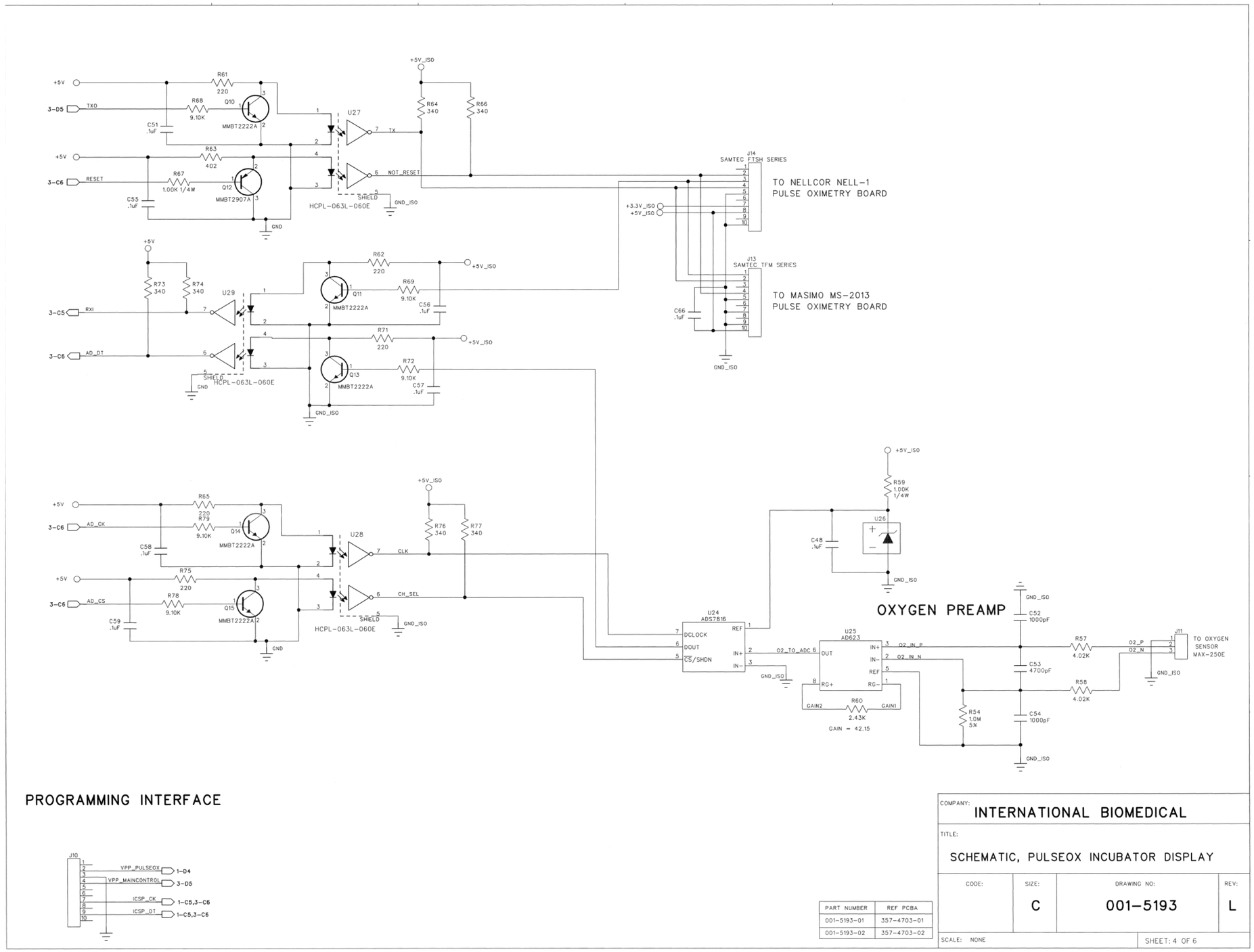
TO NELLCOR NELL-1 PULSE OXIMETRY BOARD
TO MASIMO MS-2013 PULSE OXIMETRY BOARD
OXYGEN PREAMP
TO OXYGEN SENSOR MAX-250E
PROGRAMMING INTERFACE
HCPL-063L-060E
MMBT2222A
MMBT2907A
U24 ADS7816
U25 AD623
U26
U27
U28
U29
J14 SAMTEC FTSH SERIES
J13 SAMTEC TFM SERIES
J11
J10
GAIN = 42.15
COMPANY: INTERNATIONAL BIOMEDICAL
TITLE: SCHEMATIC, PULSEOX INCUBATOR DISPLAY
CODE:
SIZE: C
DRAWING NO: 001-5193
REV: L
SCALE: NONE
SHEET: 4 OF 6
PART NUMBER | REF PCBA
001-5193-01 | 357-4703-01
001-5193-02 | 357-4703-02

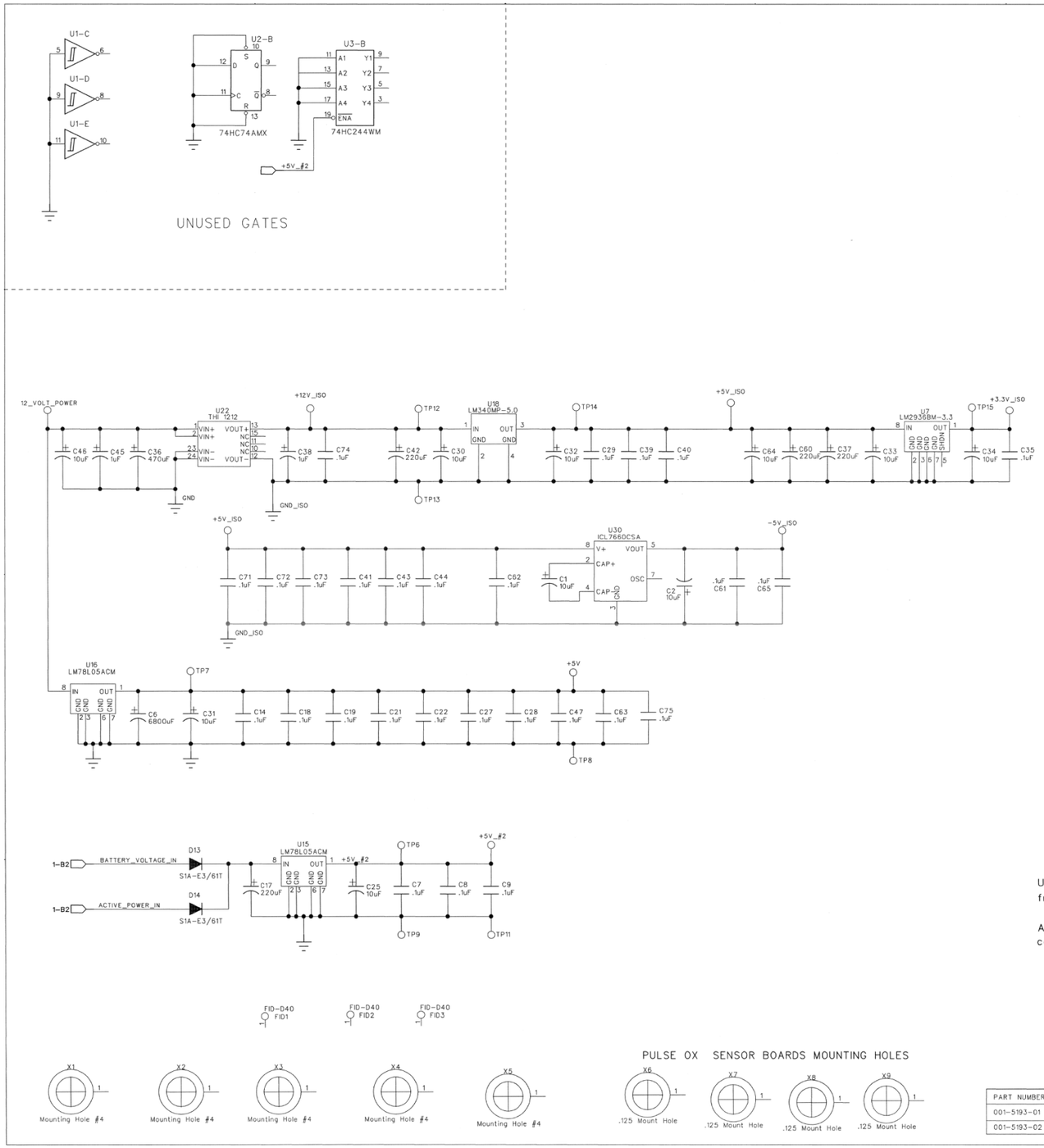

POWER / GROUND / BYPASS CAPS

REF	DEVICE	POWER PINS	SOURCE	GROUND PINS	C-Bypass
U1	74HC14	14	U15	7	C7
U2	74HC74A	14	U15	7	C8
U3	74HC244	20	U15	10	C9
U4	PIC16F877	7, 28	U16	6, 29	C18, C19
U5	CD4013B	14	SEE NOTE	7	C20
U6	LTC1453	8	U16	5	C63
U8	DS2003	NONE	NONE	8	NONE
U9	DS2003	NONE	NONE	8	NONE
U10	DS2003	NONE	NONE	8	NONE
U11	UDN2985A	9	J1-29	10	NONE
U13	LM10CL	7	U18	4	C73
U14	ICL7621BCPA	8	U16	4	C22
U19	PIC16F877A	7, 28	U16	6, 29	C27, C28
U20	DS2003	NONE	NONE	8	NONE
U12	DS2003	NONE	NONE	8	NONE
U17	CC1R5-1212	1	J1-29	3	C45
U21	UDN2985A	9	J1-29	10	NONE
U7	LM2936Z-3.3	2	U18	2 ISO	C41
U27	HPCL-261N	8	U18	5 ISO	C43
U23	74HC238	16	U16	8	C47
U24	ADS7816	8	U18	4 ISO	C40
U25	AD623	7	U18	4 -5V_ISO	C44,C61
U26	LM4040A	Z-CATHODE	U18	2 ISO	J1-13,15,17
U28	HPCL-261N	8	U18	5 ISO	C39
U29	HPCL-261N	8	U16	5	C21
U18	LM340T-5.0	8	U4-7	5	C21
U17	74HC238	8	U16	5	C14
U31	AD7816	8	U18	4 ISO	C71
U32	HPCL-261N	8	U18	5 ISO	C72
U33	HPCL-261N	8	U16	5	C75
U34	ADR02	2	U22	4 ISO	C74

U5 draws from from the 12V supply of the control board (originating from J1-29) through a reverse blocking diode (D11)

All circuits are referenced to ground through J1-21,23,25 EXCEPT components powered by U22 which creates an isolated ground.

PART NUMBER	REF PCBA
001-5193-01	357-4703-01
001-5193-02	357-4703-02

COMPANY: INTERNATIONAL BIOMEDICAL

TITLE: SCHEMATIC, PULSEOX INCUBATOR DISPLAY

CODE:	SIZE:	DRAWING NO:	REV:
	C	001-5193	L

SCALE: NONE SHEET: 5 OF 6

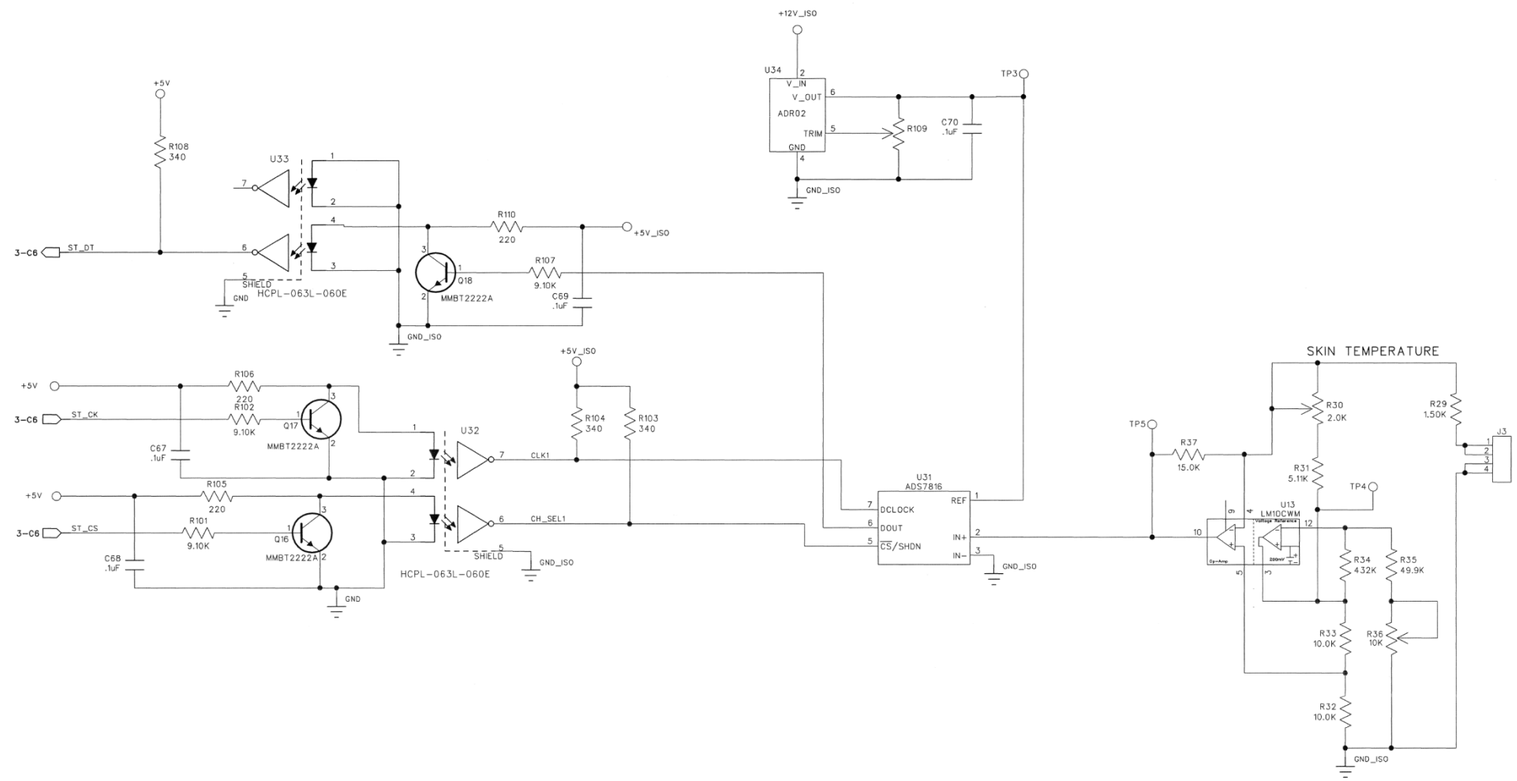

PART NUMBER	REF PCBA
001-5193-01	357-4703-01
001-5193-02	357-4703-02

COMPANY: INTERNATIONAL BIOMEDICAL

TITLE: SCHEMATIC, PULSEOX INCUBATOR DISPLAY

CODE:	SIZE:	DRAWING NO:	REV:
	C	001-5193	L

SCALE: NONE

SHEET: 6 OF 6

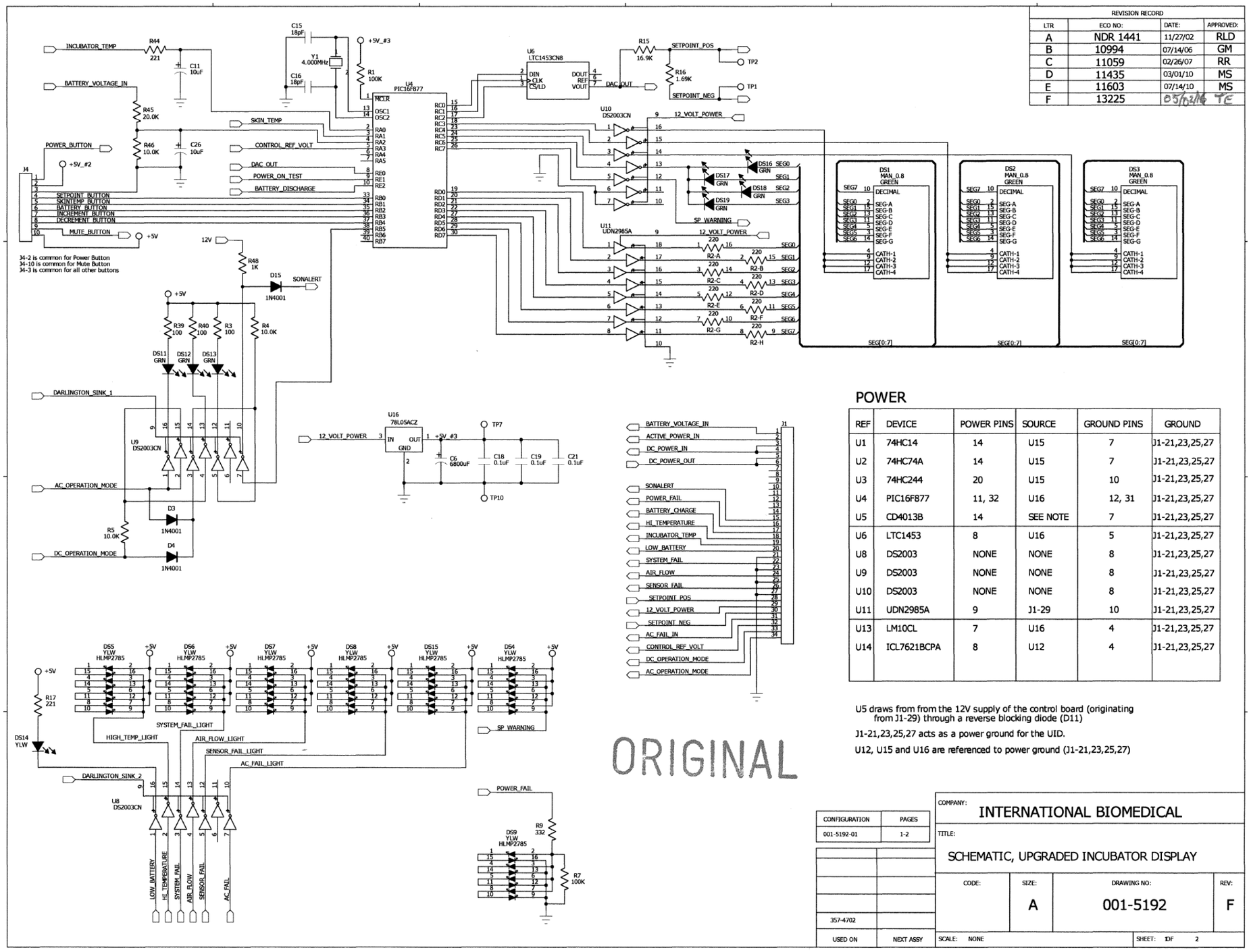

POWER

REF	DEVICE	POWER PINS	SOURCE	GROUND PINS	GROUND
U1	74HC14	14	U15	7	J1-21,23,25,27
U2	74HC74A	14	U15	7	J1-21,23,25,27
U3	74HC244	20	U15	10	J1-21,23,25,27
U4	PIC16F877	11, 32	U16	12, 31	J1-21,23,25,27
U5	CD4013B	14	SEE NOTE	7	J1-21,23,25,27
U6	LTC1453	8	U16	5	J1-21,23,25,27
U8	DS2003	NONE	NONE	8	J1-21,23,25,27
U9	DS2003	NONE	NONE	8	J1-21,23,25,27
U10	DS2003	NONE	NONE	8	J1-21,23,25,27
U11	UDN2985A	9	J1-29	10	J1-21,23,25,27
U13	LM10CL	7	U16	4	J1-21,23,25,27
U14	ICL7621BCPA	8	U12	4	J1-21,23,25,27

U5 draws from from the 12V supply of the control board (originating from J1-29) through a reverse blocking diode (D11)

J1-21,23,25,27 acts as a power ground for the UID.

U12, U15 and U16 are referenced to power ground (J1-21,23,25,27)

CONFIGURATION	PAGES
001-5192-01	1-2
357-4702	
USED ON	NEXT ASSY

COMPANY: INTERNATIONAL BIOMEDICAL

TITLE: SCHEMATIC, UPGRADED INCUBATOR DISPLAY

CODE:	SIZE:	DRAWING NO:	REV:
	A	001-5192	F

SCALE: NONE SHEET: 1OF 2

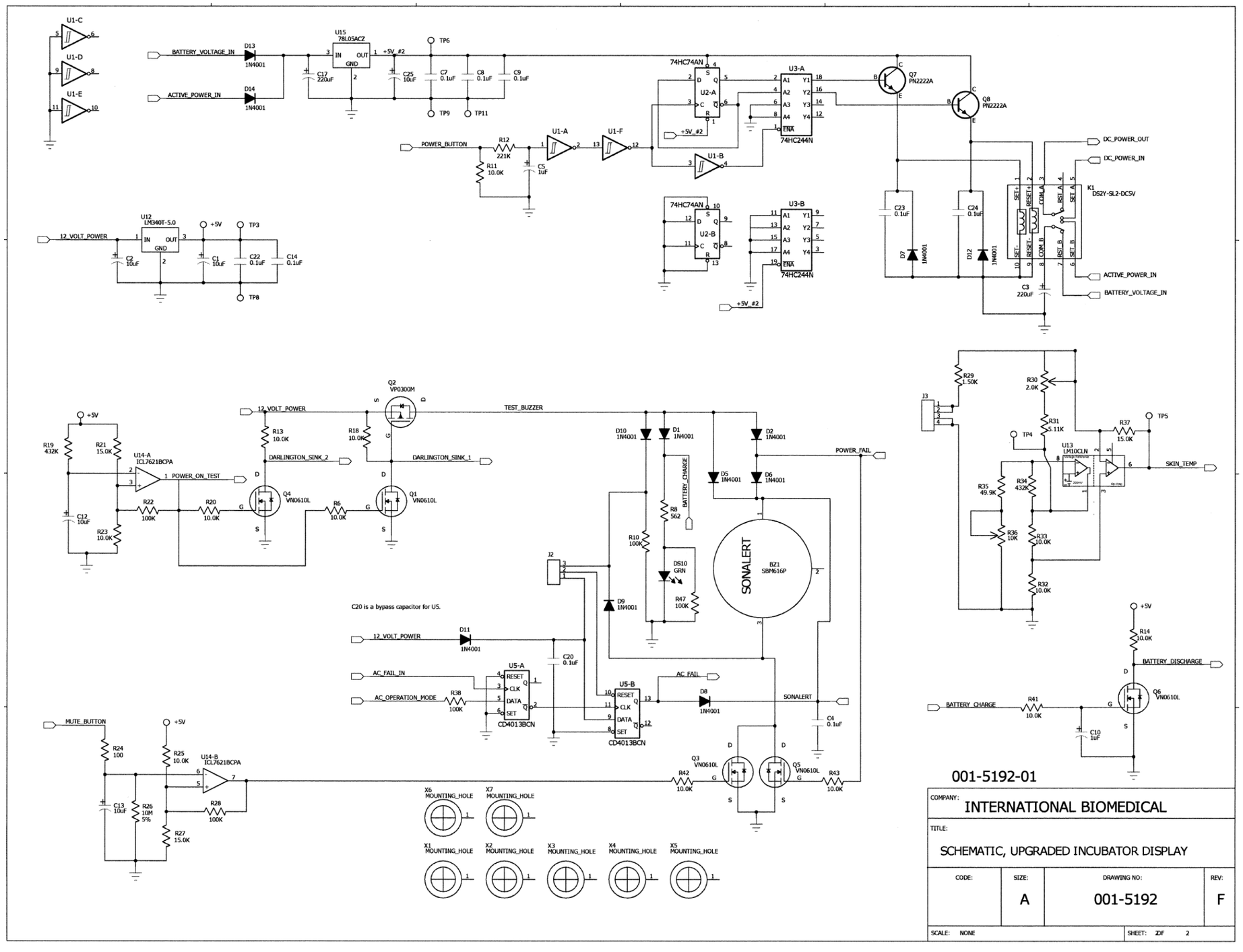
U1-C
U1-D
U1-E
BATTERY_VOLTAGE_IN
ACTIVE_POWER_IN
D13 1N4001
D14 1N4001
U15 78L05ACZ
IN OUT GND
C17 220uF
C25 10uF
+5V_#2
TP6
TP9
TP11
C7 0.1uF
C8 0.1uF
C9 0.1uF
74HC74AN
U2-A
U3-A
74HC244N
Q7 PN2222A
Q8 PN2222A
POWER_BUTTON
R12 221K
R11 10.0K
C5 1uF
U1-A
U1-F
U1-B
U2-B
U3-B
DC_POWER_OUT
DC_POWER_IN
K1 DS2Y-SL2-DC5V
C23 0.1uF
C24 0.1uF
D7 1N4001
D12 1N4001
C3 220uF
ACTIVE_POWER_IN
BATTERY_VOLTAGE_IN
U12 LM340T-5.0
12_VOLT_POWER
C2 10uF
C1 10uF
C22 0.1uF
C14 0.1uF
+5V
TP3
TP8
Q2 VP0300M
TEST_BUZZER
R13 10.0K
R18 10.0K
DARLINGTON_SINK_2
DARLINGTON_SINK_1
Q4 VN0610L
Q1 VN0610L
R19 432K
R21 15.0K
U14-A ICL7621BCPA
POWER_ON_TEST
R22 100K
R20 10.0K
R6 10.0K
C12 10uF
R23 10.0K
D10 1N4001
D1 1N4001
D2 1N4001
D5 1N4001
D6 1N4001
POWER_FAIL
BATTERY_CHARGE
R8 562
R10 100K
DS10 GRN
R47 100K
SONALERT
BZ1 SBM616P
J2
D9 1N4001
C20 is a bypass capacitor for U5.
D11 1N4001
AC_FAIL_IN
AC_OPERATION_MODE
R38 100K
U5-A
CD4013BCN
U5-B
AC_FAIL
D8 1N4001
SONALERT
C4 0.1uF
MUTE_BUTTON
R24 100
R25 10.0K
U14-B ICL7621BCPA
C13 10uF
R26 10M 5%
R27 15.0K
R28 100K
Q3 VN0610L
Q5 VN0610L
R42 10.0K
R43 10.0K
X6 MOUNTING_HOLE
X7 MOUNTING_HOLE
X1 MOUNTING_HOLE
X2 MOUNTING_HOLE
X3 MOUNTING_HOLE
X4 MOUNTING_HOLE
X5 MOUNTING_HOLE
J3
R29 1.50K
R30 2.0K
R31 5.11K
TP4
R37 15.0K
TP5
U13 LM10CLN
SKIN_TEMP
R35 49.9K
R34 432K
R36 10K
R33 10.0K
R32 10.0K
R14 10.0K
BATTERY_DISCHARGE
Q6 VN0610L
BATTERY_CHARGE
R41 10.0K
C10 1uF
001-5192-01
COMPANY:
INTERNATIONAL BIOMEDICAL
TITLE:
SCHEMATIC, UPGRADED INCUBATOR DISPLAY
CODE:
SIZE:
A
DRAWING NO:
001-5192
REV:
F
SCALE: NONE
SHEET: 2OF 2

TEMPERATURE SENSOR RESISTANCE VALUES

Temperature (° C)	Resistance (ohms)
15	3539
16	3378
17	3226
18	3081
19	2944
20	2814
21	2690
22	2572
23	2460
24	2354
25	2252
26	2156
27	2064
28	1977
29	1894
30	1815
31	1739
32	1667
33	1599
34	1533
35	1471
36	1412
37	1355
38	1301
39	1249
40	1200
41	1152
42	1107
43	1064
44	1023

THIS DOCUMENT CONTAINS PROPRIETARY INFORMATION AND IS LOANED IN CONFIDENCE SUBJECT TO RETURN UPON DEMAND ON THE EXPRESS CONDITION THAT IT WILL NOT BE USED IN ANY WAY NOT AUTHORIZED IN WRITING BY INTERNATIONAL BIOMEDICAL.

REVISION HISTORY			
REV	DESCRIPTION	DATE	APPROVED
A	RELEASED PER NDR-1799	4/15/09	TE

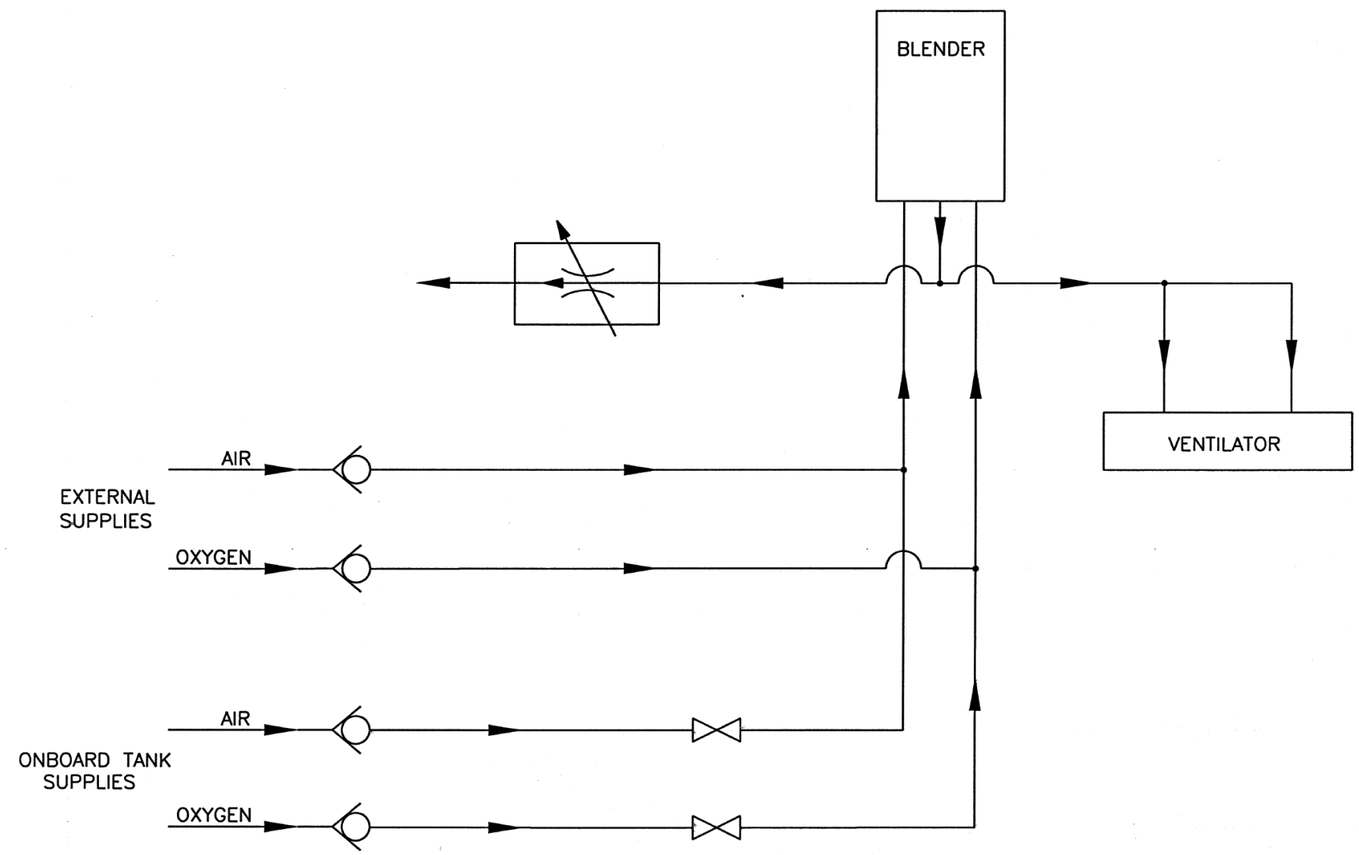

ORIGINAL

SYMBOL KEY

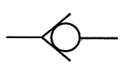
CHECK VALVE

SHUT–OFF VALVE

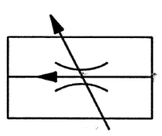
FLOW CONTROL VALVE WITH VARIABLE OUTPUT

	A750i
NEXT ASSY	USED ON
APPLICATION	

UNLESS OTHERWISE SPECIFIED DIMENSIONS ARE IN INCHES. TOLERANCES ARE:

DECIMALS	ANGLES
.X ±.1	±1/2°
.XX ±.03	
.XXX ±.010	

DO NOT SCALE DRAWING

APPROVALS		DATE
DRAWN	TE	120808
CHECKED	TE	4/15/09
ENGR	TE	4/15/09

International Biomedical
8508 CROSS PARK DR. AUSTIN, TX 78754

TITLE SCHEMATIC, PNEUMATIC A750i CART

SIZE	CAGE CODE	DWG NO.	REV
B		002-4010	A

SCALE NONE | SHEET 1 OF 1