AirBORNe®

# NxtGen Transport Incubator

## Operator Manual

international BIOMEDICAL®

AirBORNe®

NxtGen Transport Incubator

# *Operator's Manual*


- ***Phone: (512) 873-0033***
- ***Fax: (512) 873-9090***
- ***E-Mail: sales@int-bio.com***
- ***Website: http://www.int-bio.com***

- ***Manufacturer name, address, and mailing address:***

  ***International Biomedical***
  ***8206 Cross Park Dr.***
  ***Austin, TX 78754***
  ***USA***

- ***Authorized representative in Europe for Regulatory Affairs:***

  EC REP
  ***Emergo Europe***
  ***Westervoortsedijk 60***
  ***6827 AT***
  ***Arnhem, The Netherlands***

- ***Authorized representative in Switzerland:***

  CH REP
  ***MedEnvoy Global BV***
  ***Gotthardstrasse 28***
  ***6302 Zug***
  ***Switzerland***


CE
2797

# TABLE OF CONTENTS


1. GENERAL INFORMATION ..... 5
   1.1. Introduction ..... 5
   1.2. Intended Use ..... 5
   1.3. Indications for Use ..... 5
   1.4. Classification ..... 6
   1.5. CE Marking Information ..... 6
   1.6. Safety Summary ..... 7
   1.7. Safety Notice ..... 7
   1.8. Important Safety Considerations ..... 7
   1.9. Symbols ..... 20
2. INITIAL SETUP ..... 22
   2.1. Unpacking Instructions ..... 22
   2.2. Mounting Provisions ..... 23
3. SYSTEM OVERVIEW ..... 24
   3.1. Physical Description ..... 24
      3.1.1. **Transport Incubator** ..... 24
      3.1.2. **Rear Electronics Panel** ..... 25
      3.1.3. **Patient Connector Panel (Located on left or right end panel)** ..... 26
   3.2. System Power ..... 26
      3.2.1. **AC Power** ..... 26
      3.2.2. **DC Power** ..... 26
      3.2.3. **Battery Power** ..... 27
   3.3. External Power Connections ..... 27
      3.3.1. **External AC Power** ..... 27
      3.3.2. **External DC Power** ..... 28
      3.3.3. **Multiple Socket Outlets** ..... 28
      3.3.4. **DC Power Outlet** ..... 29
4. PRE-USE CHECKOUT ..... 29
   4.1. Pre-Use Checkout ..... 29
      4.1.1. **Operational Check** ..... 29
      4.1.2. **Infant Chamber Check** ..... 30
      4.1.3. **Accessories** ..... 30
      4.1.4. **Sensors and Cables** ..... 30
5. OPERATING INSTRUCTIONS ..... 30
   5.1. Power On ..... 30
   5.2. Power On Self-Test ..... 30
   5.3. Pre-Heat Mode ..... 31
   5.4. Administrator Menu ..... 31
   5.5. Service Menu ..... 36
6. NORMAL OPERATION ..... 43
   6.1. Main Screen Navigation ..... 43
   6.2. Thermal Operation ..... 46
   6.3. Thermal Control System Description ..... 47
   6.4. Setup ..... 47
      6.4.1. **Skin Temperature Probes** ..... 47
   6.5. Admitting a Patient ..... 54
      6.5.1. **Patient Positioning Straps Installation and Application** ..... 55
7. MESSAGE CENTER ..... 56
   7.1. Indicators ..... 56
   7.2. Power off the Device ..... 58

# TABLE OF CONTENTS


8. GENERAL ALARM INFORMATION ..... 59
8.1. Alarm Types ..... 59
8.2. Alarm Dropdown ..... 60
8.3. Alarm Audio Pause ..... 62
8.4. Technical Error ..... 62
8.5. Alarm Verification ..... 63
8.5.1. **Test of Temperature Alarms** ..... 63
8.5.2. **Test of $SpO_2$ Alarms** ..... 63
8.5.3. **Test of $O_2$ Alarms** ..... 64
8.5.4. **Test of Heated Mattress Alarms** ..... 64
9. DATA STORAGE ..... 64
9.1. Introduction ..... 64
9.2. Setup ..... 65
9.3. General Operation ..... 65
10. PULSEOX (OPTIONAL) ..... 65
10.1. Introduction ..... 65
10.2. Pulse Oximetry Theory of Operation ..... 66
10.3. Setup ..... 67
10.4. General Operation ..... 67
10.5. Setting Alarm Limits - %$SpO_2$ ..... 69
10.6. Setting Alarm Limits - Pulse Rate ..... 70
10.7. Signal Strength ..... 71
10.8. Perfusion Index (Masimo Only) ..... 71
10.9. Pulse Rate (BPM) ..... 71
10.10. Alarm Delay ..... 72
10.11. Sensors ..... 72
10.12. Pulse Oximetry Testers / Simulators ..... 72
11. PHOTOTHERAPY ..... 72
11.1. Introduction ..... 72
11.2. Setup ..... 73
11.2.1. **Check Intensity** ..... 73
11.2.2. **Prepare the Infant** ..... 73
11.3. General Operation ..... 73
11.3.1. **Effective Surface Area** ..... 75
11.3.2. **Phototherapy Light Lifetime Indicator** ..... 76
12. OBSERVATION LIGHT ..... 76
12.1. Introduction ..... 76
12.2. Setup ..... 76
12.3. General Operation ..... 77
12.3.1. **Turning the Observation Light ON** ..... 78
12.3.2. **Turning the Observation Light OFF** ..... 79
12.3.3. **Adjusting the Observation Light Intensity** ..... 79
12.3.4. **Observation Light System Interactions with the Optional Phototherapy System** ..... 79
13. AMBIENT OXYGEN MONITOR ..... 79
13.1. Introduction ..... 79
13.1.1. **Temperature** ..... 79
13.1.2. **Pressure** ..... 80
13.1.3. **Humidity** ..... 80
13.1.4. **Oxygen Sensors** ..... 80
13.2. Setup ..... 80

# TABLE OF CONTENTS


13.2.1. **Calibration** ..... 80
13.3. General Operation ..... 82
14. HEATED MATTRESS ..... 83
14.1. Introduction ..... 83
14.2. Setup ..... 83
14.3. General Operation ..... 84
15. SUCTION ..... 85
15.1. Introduction ..... 85
15.2. Setup ..... 85
15.3. General Operation ..... 86
16. TIMERS ..... 88
16.1. Introduction ..... 88
16.2. General Operation ..... 88
17. DEVICE SETTINGS ..... 90
17.1. Introduction ..... 90
17.2. General Operation ..... 90
18. CLEANING ..... 93
18.1. Introduction ..... 93
18.2. Inspection ..... 94
18.3. Cleaning of Oxygen Sensor (Optional Equipment) ..... 95
18.4. Cleaning of Cables (Optional Equipment) ..... 95
18.5. Cleaning of Patient Temperature Probes ..... 96
18.6. Cleaning of Pulse Ox Sensor (Optional Equipment) ..... 96
18.7. Cleaning of Mattress/Heated Mattress ..... 96
18.8. Cleaning of Suction ..... 96
19. PREVENTATIVE MAINTENANCE ..... 96
19.1. Introduction ..... 96
19.2. Pre-Use Checkout ..... 96
19.2.1. **Operational Check** ..... 96
19.2.2. **Infant Chamber Check** ..... 97
19.2.3. **Mattress Tray Check** ..... 97
19.2.4. **Light Bar** ..... 97
19.2.5. **Accessories** ..... 98
19.2.6. **Sensors and Cables** ..... 98
19.3. Annual Maintenance ..... 98
19.4. Battery Maintenance ..... 98
19.4.1. **Battery Removal** ..... 98
19.5. Calibration Schedule ..... 99
20. TROUBLESHOOTING ..... 99
20.1. General ..... 99
20.2. Power On Self-Test ..... 100
20.2.1. Power on Self-Test Images ..... 100
21. ACCESSORIES ..... 101
22. REPAIR POLICY ..... 101
23. WARRANTY ..... 102
Operating, Storage, and Transport Environment ..... 103
General Mechanical Specifications ..... 103
Electrical Specifications ..... 104
Operational Specifications ..... 104
Pulse Oximeter Specifications (Optional Feature) ..... 104

# TABLE OF CONTENTS

**Range** ..... 104
**Resolution** ..... 105
**Sensor Peak Wavelengths** ..... 105
**Sensor Maximum Power Output** ..... 105
**Masimo Sensor Accuracy**[7] ..... 106
**Nellcor Sensor Accuracy**[6] ..... 109
**Interfering Substances** ..... 111
Ambient Oxygen Monitor Specifications (Optional Feature) ..... 111
**Interfering Substances** ..... 111
Phototherapy Specifications ..... 111
Observation Light Specifications ..... 112
Suction Specifications ..... 112
Environmental Requirements ..... 123

# 1. GENERAL INFORMATION

## 1.1. Introduction

This operator's manual describes the system, setup, operation, cleaning, maintenance, troubleshooting, and technical specifications for the NxtGen Transport Incubator. Read the NxtGen manual thoroughly to understand all instructions, warnings, cautions, and notes before operating the device. International Biomedical is not responsible for any malfunction due to improper use or service by unauthorized International Biomedical personnel. For any technical problem, contact your International Biomedical representative. There are no known contraindications associated with the NxtGen Transport Incubator. Additional information can be found in the service manual.

## 1.2. Intended Use

The NxtGen Transport Incubator is intended for use by personnel trained in neonatal care to facilitate the movements of neonates by air or ambulance. The Transport Incubator provides heat in a controlled manner to neonates through an enclosed temperature controlled environment. The Transport Incubator is also intended to carry equipment designed for airway management and monitoring of the neonatal infant's status. The device provides two modes of heat: Manual (Operator) Controlled or Skin (Servo) Controlled. All Transport Incubators may be optionally configured with pulse oximetry, a suction device, and an integrated heated mattress. In addition, the NxtGen Transport Incubator may be configured with optional blue LED phototherapy to treat indirect hyperbilirubinemia.

## 1.3. Indications for Use

| Device | Indication For Use | Clinical Benefit |
|---|---|---|
| Transport Incubator | Facilitate the movement of neonates who require critical care and continuous monitoring by air or ambulance. | Provide a safe and secure environment for infants during transport. |
| | Support infants who have limited capacity to thermoregulate and are prone to decreased core temperature. | Prevent hypothermia by providing a stable thermal environment. |
| | Provide an enclosed environment for infants requiring critical care and continuous monitoring. | Reduce risk of heat loss and support infant body thermoregulation. |
| **Accessories** | **Indication For Use** | **Clinical Benefit** |
| Phototherapy Light | Treat neonatal hyperbilirubinemia. | Treat neonatal hyperbilirubinemia. |
| Suction Device | Assist infant neonates when unable to effectively move secretions from the respiratory tract due to increase in carbon dioxide, increase in oxygen needs, or excessive production of secretions. | Allow infant airway to be clear of secretions. |
| Heated Mattress | Support infants who have limited capacity to thermoregulate and are prone to decreased core temperature. | Prevent hypothermia by providing a stable thermal environment. |
| Pulse Oximetry | Monitor blood oxygen level and heart rate for infants with altered cardiac output and/or respiratory dysfunction. | Detect medical conditions relating heart rate and oxygen blood saturation. |

| | | |
|---|---|---|
| Integrated Oxygen Monitor | Monitor ambient oxygen level of infant's environment. | Prevent an unsafe breathing air ambient environment. |

1.4. Classification

According to the standard IEC 60601-1 of the International Electrotechnical Commission, *Medical electrical equipment, Part 1: General requirements for safety*, the infant Transport Incubator is classified as follows:

- Class II / Internally Powered, according to the type of protection against electric shock
- The NxtGen Transport Incubator and its applied parts are Type BF equipment. T1 and T2 patient probes, Pulse oximeter probe, ambient oxygen sensor, and the mattresses are applied parts. Care must be taken that additional equipment connected to the baby is electrically safe. To ensure patient electrical isolation, connect only to other equipment with electronically isolated circuits.
- IP33, according to the degree of protection against harmful ingress of water
- Equipment is not suitable for use in the presence of a flammable anesthetic mixture with air or with oxygen or nitrous oxide.
- Continuous operation for the mode of operation

1.5. CE Marking Information

This Instructions for Use (IFU) covers multiple device variants that fall under different conformity assessment routes in accordance with Regulation (EU) 2017/745 (MDR).

The applicable CE marking either with or without a Notified Body (NB) number depends on the classification of each device

| Device Name | Device Class | Conformity Assessment | CE Marking |
|---|---|---|---|
| NxtGen Transport Incubator | Class IIb | NB conformity assessment | CE 2797 |
| Electronic Suction Device | Class IIb | NB conformity assessment | CE 2797 |
| Patient Skin Temp Sensor | Class IIb | NB conformity assessment | CE 2797 |
| Phototherapy and Observation Light | Class IIb | NB conformity assessment | CE 2797 |
| Heated Mattress | Class IIb | NB conformity assessment | CE 2797 |
| Oxygen Monitor Sensor Cable | Class IIb | NB conformity assessment | CE 2797 |
| Infant Positioning Straps | Class I | Self-Certified by Manufacturer | CE |
| Infant Eye Shields | Class I | Self-Certified by Manufacturer | CE |

1.6. Safety Summary

The NxtGen Transport Incubator is intended to be used by trained clinicians and operated in a manner consistent with the instructions contained in this manual. Refer to any additional training, procedures, requirements, or documentation beyond those identified here for operation and policies required within the institution. All personnel operating the Transport Incubator must be familiar with the warnings and operating procedures contained in this manual. International Biomedical is not to be held responsible if the Transport Incubator is used in a manner inconsistent with the instructions herein.

Any serious incident that occurs in relation to this device should be reported to International Biomedical and the competent authority of the appropriate member state.

1.7. Safety Notice

The Transport Incubator has been tested and found to comply with limits for electromagnetic interference and susceptibility as defined by IEC 60601-1-2. However, this equipment can radiate radio frequency (RF) energy and may cause harmful interference to other devices. The Transport Incubator may also be affected by interference from other devices. If RF interference is suspected, relocate or shield the Transport Incubator to reduce or eliminate the effects.

1.8. Important Safety Considerations

Within certain governmental jurisdictions, all interconnected accessory equipment must be labeled by an approved testing laboratory. After interconnection with accessory equipment, risk (leakage) current and grounding requirements must be maintained. Assembly of a Medical Electrical System and modifications to this device during the service life require evaluation to the requirements of 60601-1. Safety concerns or additional pertinent information will be displayed using warnings, cautions, and notes, having the following significance:

| | |
|---|---|
| ⚠ WARNING | **Maintenance or operating procedure, technique, etc., which may result in personal injury or loss of life if not carefully followed.** |
| ⚠ CAUTION | Maintenance or operating procedure, technique, etc., which may result in patient harm or damage to equipment if not carefully followed. |
| ***NOTES:*** | *Maintenance or operating procedure, technique, etc., which is considered essential to emphasize.* |

The principal **WARNING** and **CAUTION** notices to be observed in use of this device are brought together here for emphasis.

# ⚠ WARNING

General

OBSERVE BEST PRACTICE: The instructions in this manual in no way supersede established medical procedures or staff preference concerning patient care.

As with all medical equipment, carefully route patient cabling to reduce the possibility of patient entanglement or strangulation.

Do not modify this equipment without proper authorization from International Biomedical.

The NxtGen Transport Incubator should be used by appropriately trained personnel and under the direction of qualified medical staff familiar with currently known risks and benefits of the NxtGen Transport Incubator use.

Skin temperature probe is not a rectal probe. The skin temperature sensor is not to be used as a rectal probe.

Warming transdermal medications can increase drug delivery and may result in patient danger.

Do not use the observation light, the pulse oximeter, heated mattress, or ambient oxygen monitor in the presence of flammable anesthetics or other flammable substance in combination with air, oxygen-enriched environments, or nitrous oxide.

USE OF OXYGEN INCREASES FIRE DANGER: Spark-producing auxiliary equipment should not be placed in or near the Transport Incubator.

USE OF OXYGEN INCREASES FIRE DANGER: Small amounts of flammable agent left in the incubator can cause fire.

Avoid direct sunlight or radiant heat, which can cause a dangerous increase in chamber's air temperature and affect the amount of irradiation being provided to the patient.

The use of oxygen may increase the noise level within the infant chamber.

Use of this equipment adjacent to or stacked with other equipment should be avoided because it could result in improper operation. If such use is necessary, this equipment and the other equipment should be observed to verify that they are operating normally.

Use of accessories, transducers, and cables other than those specified or provided by the manufacturer of this equipment could result in increased electromagnetic emissions or decreased electromagnetic immunity of this equipment and result in improper operation.

Varying ambient conditions, such as the ambient temperature and/or different radiation sources, may adversely affect the patient. Please refer to your institution's policy and procedure regarding appropriate ambient conditions.

Portable RF communications equipment (including peripherals such as antenna cables and external antennas) should be used no closer than 30 cm (12 inches) to any part of the NxtGen system, including cables specified by the manufacturer. Otherwise, degradation of the performance of this equipment could result.

Do not use the NxtGen system during magnetic resonance imaging (MRI) scanning. The NxtGen system may affect the MRI image and the MRI unit may affect the NxtGen system's operation.

Do not use liquids in or around the Transport Incubator.

Stop using the device if it is defective, indicate on the device that it is out of order, and contact your provider or International Biomedical representative.

Different alarm presets on the same or similar equipment in the same area could lead to operator confusion and patient danger.

DO NOT USE EXTENSION CORDS. If the integrity of the connection is in doubt, the Transport Incubator should be operated from its internal battery.

Do not position the Transport Incubator so that it is difficult to disconnect from the AC outlet.

External Power Connections

Only designated accessories are to be used with the provided multiple socket outlets.

Connecting electrical equipment to the multiple socket outlets effectively creates a Medical Electrical System, and can result in a reduced level of safety.

The ground connection of the multiple socket outlet is not a protective earth.

Do not connect additional multiple socket outlets or extension cords to the multiple socket outlet.

Pre-Heat

Do not admit patient while in Pre-Heat Mode, all clinical alarms/alerts are disabled.

Alarm System

Do not rely exclusively on the audible alarm system. Setting alarm conditions to the extreme (example: on/off, too high/too low) may result in patient danger. The most valuable method of patient monitoring combines close personal assessment with correct operation of the device.

Check alarm limits each time the device is used to ensure that they are appropriate for the patient being monitored.

Auditory alarm signal sound pressure levels, which are less than ambient levels, can impede recognition of alarm signals and the NxtGen Transport Incubator provides a restricted means to configure the minimum operator adjustable alarm volume.

Pulse Oximeter

If using pulse oximetry during full body irradiation, keep the sensor out of the irradiation field. If the sensor is exposed to irradiation, the reading might be inaccurate or the unit might read zero for the duration of the active irradiation period.

The pulse oximeter should NOT be used as an apnea monitor.

Pulse rate measurement is based on the optical detection of a peripheral flow pulse and therefore may not detect arrhythmias. The pulse oximeter should not be used as a replacement or substitute for ECG based arrhythmia analysis.

Do not place the pulse oximeter or accessories in any position that might cause it to fall on the patient.

Misapplication of a PULSE OXIMETER PROBE with excessive pressure for prolonged periods can induce pressure injury.

INTERFERING SUBSTANCES: Dyes or any substance containing dyes that change usual blood pigmentation may cause erroneous $SpO_2$ readings.

The pulse oximeter may be used during defibrillation, but this may affect the accuracy or availability of the parameters and measurements.

The pulse oximeter may be used during electrocautery, but this may affect the accuracy or availability of the parameters and measurements.

The pulse oximeter should not be used for arrhythmia analysis.

$SpO_2$ is empirically calibrated in healthy adult volunteers with normal levels of carboxyhemoglobin (COHb) and methemoglobin (MetHb).

The pulse oximeter should not be used as the sole basis for medical decisions. It must be used in conjunction with clinical signs and symptoms.

Do not adjust, repair, open, disassemble, or modify the pulse oximeter or accessories. Injury to personnel or equipment damage could occur. Return the pulse oximeter for servicing if necessary.

To protect against damaging the device, follow the directions below:

- Avoid placing the device on surfaces with visible liquid spills.
- Do not soak or immerse the device in liquids.
- Do not attempt to sterilize the device.
- Use cleaning solutions only as instructed in this operator's manual.
- Do not attempt to clean the device while monitoring a patient.

Inaccurate $SpO_2$ readings may be caused by:

- Improper sensor application and placement
- Elevated levels of COHb or MetHb: High levels of COHb or MetHb may occur with a seemingly normal $SpO_2$. When elevated levels of COHb or MetHb are suspected, laboratory analysis (CO-Oximetry) of a blood sample should be performed.
- Elevated levels of bilirubin
- Elevated levels of dyshemoglobin
- Vasospastic disease, such as Raynaud's, and peripheral vascular disease
- Hemoglobinopathies and synthesis disorders such as thalassemias, Hb s, Hb c, sickle cell, etc.
- Hypocapnic or hypercapnic conditions
- Severe anemia
- Very low arterial perfusion
- Extreme motion artifact
- Abnormal venous pulsation or venous constriction
- Severe vasoconstriction or hypothermia
- Arterial catheters and intra-aortic balloon
- Intravascular dyes, such as indocyanine green or methylene blue
- Externally applied coloring and texture, such as nail polish, acrylic nails, glitter, etc.
- Birthmark(s), tattoos, skin discolorations, moisture on skin, deformed or abnormal fingers. etc.
- Skin color disorders

Do not start or operate the pulse oximeter unless the setup was verified to be correct.

If any measurement seems questionable, first check the patient's vital signs by alternate means and then check the pulse oximeter for proper functioning.

Do not use the pulse oximeter if it appears or is suspected to be damaged.

To protect from electric shock, always remove the sensor and completely disconnect the pulse oximeter before bathing the patient.

Phototherapy

Incorrect use of the light or the use of parts and accessories that are not manufactured or supplied by International Biomedical can damage the light and may cause injury to the patient and/or operator.

Do not look directly into the LEDs. During observation/phototherapy light use, always protect the patient's eyes with eye shields or equivalent. Per your institution's protocol, periodically verify that the baby's eyes are protected and free of infection.

Turn off the light bar and allow the light bar to cool before handling as the light bar can be hot.

The use of the baby or skin temperature probes is recommended to track the infant's temperature during phototherapy. In addition, use of reflective foils may cause hazardous body temperature. Monitor the infant's skin temperature per your institution's policy during phototherapy to avoid fluctuation in body temperature.

Always switch off the power and disconnect the power cord when cleaning the light bar.

Prior to administering phototherapy, ensure phototherapy has been prescribed for the infant.

Operators should avoid looking directly at the phototherapy light. Prolonged exposure may induce headache, nausea, or vertigo.

Bilirubin levels of infants receiving phototherapy should be regularly measured.

Phototherapy equipment should only be initiated and used by appropriately trained personnel and under the direction of qualified medical personnel familiar with currently known risks and benefits of infant phototherapy equipment.

The phototherapy light system can increase the patient's body temperature. Closely monitor the patient's body temperature and adjust the Transport Incubator's set point accordingly.

Sensitive individuals may experience headache, nausea, or mild vertigo if he/she stays too long in the irradiated area. Using the phototherapy system in a well-lit area or wearing glasses with yellow lenses can reduce side effects.

Bilirubin Photoisomers may cause toxic effects.

Intensive phototherapy may not be appropriate for all infants (i.e. preterm infants ≤ 1000 g).

Refer to the jaundice management guidelines or regulations in your country to determine the best treatment path for neonatal hyperbilirubinemia; such as the AAP Guidelines (American Academy of Pediatrics Clinical Practice Guideline - Management of Hyperbilirubinemia in the Newborn Infant 35 or More Weeks of Gestation); or NICE guidelines (National Institute for Health and Clinical Excellence - Neonatal Jaundice).

Heated Mattress

The surface of the heated mattress should be checked for mechanical damage before each use. Do not use heated mattress if there is any sign of damage.

Always monitor patient's temperature while using the heated mattress. Failure to monitor the patient's temperature can result in serious injury.

Do not use heated mattress in combination with additional heating elements.

Gel pads should not be used. Gel pads may cause decreased warming performance, as the mattress would first heat the gel pad.

The use of materials of good thermal conductivity, such as water, gel and similar substances, with the heated mattress not switched on can decrease the temperature of the body of a patient.

There is a risk of electrical shock, burns, or electromagnetic interference with use of HF surgical instruments or endocardial catheters while the heated mattress is in use.

Suction

Service the suction equipment if liquids or solids are drawn into the vacuum pump.

Suction equipment should only be used by persons who have received adequate instructions in its use.

Cleaning

Turn the power OFF, remove the power plug from the power outlet, and allow the heater to cool down before cleaning and disinfecting the device.

Ensure that the device is cleaned and disinfected before first use, between patients, and after maintenance.

Maintenance

Battery maintenance should be performed by service personnel only.

Battery should be removed if device it is not likely to be used for some time.

This Transport Incubator was calibrated with the infant chamber originally supplied. If this chamber is exchanged for an infant chamber of a different configuration or size, the temperature calibration will be affected. Consult International Biomedical before returning the Transport Incubator to service.

Periodically check the internal battery for excessive wear.

**⚠ CAUTION**

General

The Transport Incubator MUST be plugged into AC power and the battery recharged after any battery usage. The battery will sustain damage if drained of power and not recharged.

Verify temperature and oxygen settings after power outage, battery disconnection, or change in power supply.

After the patient is admitted, adjustments to the device operating parameters should not be made unless necessary.

Do not move the Transport Incubator by pushing on the infant chamber. The infant chamber is not designed to sustain the forces to push the Transport Incubator. Stress fractures in the infant chamber can occur.

The NxtGen Transport Incubator cannot differentiate between an increase in core temperature with cold skin (fever), and low core and skin temperature (hypothermia). Patient temperature should be verified with an axillary thermometer.

The NxtGen Transport Incubator does not control the level of humidity in the chamber.

DO NOT leave the cord attached to the DC connector of the Transport Incubator when not operating in DC power mode.

U. S. Federal and Canadian law restricts this device to sale by or on the order of a physician or other licensed medical practitioner. Outside Canada and the U. S., check with local laws for applicable restrictions.

Disposal of product - Comply with local laws in the disposal of the device and/or its accessories.

Positioning straps are intended to prevent the PATIENT from moving and should be inspected regularly with respect to their safety function.

Positioning straps are designed to be discarded after single patient use. Washing and reusing this product may put sequential patients at risk for:

- Skin irritation (breakdown of material or retention of soaps and chemicals)
- Viral, bacterial, or fungal infection
- Falls due to weakening of the fastening material and base fabric

Keep all positioning strap material away from patient neck area. Tightness of the strap should not impede chest expansion in any way.

Pulse Oximeter

Pulse oximeter probes and cables are designed for use with specific monitors. Only use Masimo sensors and patient cables for Masimo pulse oximetry model. Only use Nellcor sensors and patient cables for Nellcor pulse oximetry model. Verify the compatibility of the monitor, sensor, and cable before use, otherwise patient injury can result.

Replace the cable or sensor when a low SIQ message is consistently displayed while monitoring consecutive patients after completing troubleshooting steps listed in this manual.

When patients are undergoing photodynamic therapy they may be sensitive to light sources. Pulse oximetry may be used only under careful clinical supervision for short time periods to minimize interference with photodynamic therapy.

Do not place the pulse oximeter on electrical equipment that may affect the device, preventing it from working properly.

If $SpO_2$ values indicate hypoxemia, a laboratory blood sample should be taken to confirm the patient's condition.

If the Low Perfusion message is frequently displayed, find a better perfused monitoring site. In the interim, assess the patient and, if indicated, verify oxygenation status through other means.

Change the application site or replace the sensor and/or patient cable when a "Replace sensor" and/or "Replace patient cable", or a persistent poor signal quality message (such as "Low SIQ") is displayed on the host monitor. These messages may indicate that patient monitoring time is exhausted on the patient cable or sensor.

Variation in measurements may be profound and may be affected by sampling technique as well as the patient's physiological conditions. Any results exhibiting inconsistency with the patient's clinical status should be repeated and/or supplemented with additional test data. Blood samples should be

analyzed by laboratory instruments prior to clinical decision making to completely understand the patient's condition.

Do not submerge the pulse oximeter in any cleaning solution or attempt to sterilize by autoclave, irradiation, steam, gas, ethylene oxide, or any other method. This will seriously damage the pulse oximeter.

To minimize radio interference, other electrical equipment that emits radio frequency transmissions should not be in close proximity to the pulse oximeter.

Phototherapy

The phototherapy light spectrum used can hinder clinical observations of skin color changes caused by cyanosis, etc. Care must be observed during assessments.

Phototherapy light system may disturb the patient's water balance.

Clear objects from the area in the pathway for the light emitted from the phototherapy light. Objects left in the light pathway may become overheated and cause burning.

Phototherapy light can adversely affect drugs and other infusion liquids. Drugs and infusion liquids shall not be stored in the radiation area. If intravenous delivery is performed during phototherapy, IV lines should be protected (covered).

Observation Light

The light system should be turned off when not in use.

Route the observation light power cord carefully to keep out of patient's reach.

Oxygen Monitor

Only use the approved International Biomedical cable and sensor for ambient oxygen monitoring.

Use the ambient oxygen monitor when oxygen is delivered to the infant.

The Maxtec MAX-250E oxygen sensor is a sealed device containing a mild acid electrolyte, lead (Pb), and lead acetate. Lead and lead acetate are hazardous waste constituents and should be disposed of properly, or returned to Maxtec or International Biomedical for proper disposal or recovery.

Calibrate the oxygen sensor daily when in use or if environmental conditions change significantly (i.e., Temperature, Humidity, or Barometric Pressure).

Dropping or severely jarring the oxygen sensor after calibration may shift the calibration point enough to require recalibration.

Heated Mattress

Polyurethane foams are combustible. Do not expose to flame or other ignition source.

Do not use the heated mattress without the heated mattress cover in place.

## Suction

Use only ISO 8836 compliant suction catheters.

The suction system is supplied with a disposable Suction Canister and hydrophobic filter. It is the operator's responsibility to ensure a Suction Canister with overflow protection and a filter is included on subsequent Suction Canister and tubing changes.

The disposable Suction Canister supplied with the suction system should be checked frequently to prevent overflow.

A suction bulb should be kept on-hand.

## Cleaning and Maintenance

Never immerse skin temperature probe in disinfectant or soap solution.

The Transport Incubator electronics contain static sensitive components that can be damaged by improper handling. Use approved grounding techniques for work areas and service personnel.

After cleaning and disinfecting the device, always dry completely before use.

Assemble the removed parts and check that the device operates normally after cleaning and disinfecting.

Do not spray cleaning solutions directly on the touch screen during cleaning.

Only use cleaning solutions listed in this manual. Unapproved cleaning solutions can damage the parts.

Do not allow sharp instruments to penetrate the mattress. Inspect surface before and after each use. Mattress should not be used if there is any sign of penetration or damage.

Replace battery only with an International Biomedical part.

Do not replace the battery unless properly trained.

***NOTES:***

Physical Description

*Connector panel may be located on the right or left side of the device depending on the configuration.*

*The IP classification can be found on the device product label.*

*The NxtGen system does not contain natural rubber products.*

*All materials used on continuous contact surfaces with infant are designed using biocompatible materials.*

Disable Device

*Alarms associated with the disconnected or disabled feature will not be active until the feature is reconnected or reenabled.*

*Only a touch and hold of the icon will disable a feature.*

$SpO_2$

*The pulse oximeter should be considered an early warning device. As a trend towards patient hypoxemia is indicated, blood samples should be analyzed by a laboratory cooximeter to completely understand the patient's condition.*

*Peak wavelength information may be useful to clinicians, such as those performing photodynamic therapy.*

*Loss of pulse signal can occur for many reasons including, but not limited to, when the patient has hypotension, severe vasoconstriction, severe anemia, or hypothermia; there is arterial occlusion proximal to the sensor; or the patient is in cardiac arrest or is in shock.*

*A functional tester cannot be used to assess the accuracy of the pulse oximeter.*

*High-intensity extreme lights (such as pulsating strobe lights) directed on the sensor may not allow the pulse oximeter to obtain vital sign readings.*

*When using the Maximum Sensitivity $SpO_2$ setting, performance of the "Sensor Off" detection may be compromised. If the device is in this setting and the sensor becomes dislodged from the patient, the potential for false readings may occur due to environmental "noise" such as light, vibration, and excessive air movement.*

Masimo Patents: www.masimo.com/patents.htm

*Possession or purchase of this device does not convey any expressed or implied license to use the device with unauthorized sensors or cables which would, alone or in combination with this device, fall within the scope of one or more of the patents relating to this device.*

*Additional information specific to the Masimo sensors compatible with the pulse oximeter, including information about parameter/measurement performance during motion and low perfusion, may be found in the sensor's directions for use (DFU).*

*Masimo Cables and sensors are provided with X-Cal™ technology to minimize the risk of inaccurate readings and unanticipated loss of patient monitoring. Refer to the Cable or Sensor DFU for the specified duration of the patient monitoring time.*

Phototherapy Light

*Only mount the light bar centered between the top of the inner and outer chambers where the patient cannot access unit. The distance between the light bar and the effective surface area is fixed for the low profile and XL chambers. If the distance between the light bar and the infant is increased, the irradiance intensity will decrease. If the distance between the light bar and the infant is decreased, the irradiance intensity will increase. Do not place the light bar inside the inner chamber.*

*Before installing the phototherapy light and administering phototherapy, read Section 0. of this manual carefully. There are safety considerations that should be read and understood before use.*

*The phototherapy unit uses a specific type of LED. Consult International Biomedical for repair and replacement of LEDs. Use of incorrect LEDs can adversely affect performance and/or damage the light.*

*If using pulse oximetry during phototherapy, keep the sensor out of the irradiation field. If the sensor is exposed to irradiation, the reading might be inaccurate or the unit might read zero for the duration of the active irradiation period.*

*Check irradiance intensity monthly with a calibrated meter (such as the ILT Light Meter; International Biomedical part number 736-0001, ILT part number ILT74INTERBI-CE) to ensure the light is outputting correctly.*

*The unit uses a specific type of LED. The use of incorrect LEDs can adversely affect performance and/or damage the light.*

Ambient Oxygen Monitor

*If the submenu exit is touched during the $O_2$ calibration process, the system will discard the current calibration information.*

*The oxygen sensor utilizes an electrochemical reaction and once exposed to the environment, the oxygen sensor will begin its degradation process.*

*Ambient oxygen monitor alarms will not be active during operator disabled state.*

Cleaning

*Clean and disinfect the device, as per the maintenance instructions, or whenever you notice any dirt or stain that may cause infection.*

*Do not use cleaning solutions with alcohol on the chamber. Repeated use may cause damage to the chamber over time.*

*If optional heated mattress is installed, disconnect from the connector bay prior to removal for cleaning.*

*Never use disinfectant solutions at concentrations above recommended values.*

*Never use any abrasive cloth or unapproved cleaning solution for disinfection.*

*Never autoclave removable parts.*

*Follow standard hospital cleaning/disinfecting procedures/protocol.*

*Visual inspection of device for cleanliness requires adequate lighting.*

Maintenance

*Medical institutions are responsible for performing routine maintenance as detailed in the operator manual.*

*Perform preventative maintenance procedures on all Accessory Equipment as recommended in the manual for each piece of equipment.*

Specifications

*Dimensions and weights are approximate. Height dimensions are given such that when added the approximate total height is given.*

Screen Locking

*The device screen cannot be locked with an active alarm/alert. If an alarm/alert activates while the screen is locked, the screen will unlock.*

## 1.9. Symbols

The following symbols are used on the device and its packaging.

| Symbol | Description | Symbol | Description |
|---|---|---|---|
| | Type BF Equipment | | Observation Light (Indicates Intensity) |
| | Patient Temperature | | Power button |
| | Chamber Temperature | | Recycle or Dispose of Properly |
| | Default Silent Alert | | Heated Mattress |
| | Stopwatch | VAC | Suction |
| | Timer | | Eye Protection Required |
| | Alarm Audio Pause | | Manufacturing Date |
| EC REP | European Union Representative | | Consult Accompanying Documents |
| REF | Catalog Number | SN | Serial Number |
| MD | Medical Device | UDI | Unique Device Identifier |
| | High-frequency Ventilator | | Removable Digital Media Port |
| | Manufacturer | IP33 | Ingress Protection Rating |
| | AC Current | 60°C -25°C | Shipping Temperature |
| | DC Current | 95% % 5% | Shipping Humidity |
| | Display Brightness | 110 kPa 50 kPa | Shipping Pressure Limits |

| | | | |
|---|---|---|---|
| | Screen locked | | Screen Settings |
| | Timer Play | | Screen unlocked |
| | Configure | | Timer Reset |
| | Cancel Icon | | Timer Pause |
| | Set low alarm limit | | Confirm Icon |
| | Date/Time set icon | PRE HEAT | Pre-Heat Menu |
| | Alarm Limits Icon | | Set high alarm limit |
| | Event Log Icon | | Battery Icon |
| ON OFF | Configuration Icon | | Language icon |
| | About Icon | | Return Icon |
| $SpO_2$ | $SpO_2$ Menu icon | | Administrator menu |
| | Heater Calibration icon | | Service menu |
| | Page Up | | Factory Reset |
| | AC Power Indicator | | Page Down |
| | Charging Battery Indicator | | Missing Battery Indicator |
| 90% | Battery Power Indicator | | Puncture Hazard |
| | Caution | | Consult Accompanying Documents |

| | | | |
|---|---|---|---|
| | Warning | AIR | Air Output |
| $O_2$ | Oxygen Output | $AIR+O_2$ | Blended Gas Output |
| | Ventilator Switch | | Valve Open |
| | Valve Closed | | Pressure Measurement |
| | Functional Earth | | Class II Device |
| | Download Icon | CH REP | Authorized Switzerland Representative |

## 2. INITIAL SETUP

### 2.1. Unpacking Instructions

Open and remove the outer packaging material.

Remove the inner protective foam material.

Inspect the contents for damage and verify that all items are present.

Unbolt the Transport Incubator from the underside of the pallet.

If present, cut away any tie-down straps.

## 2.2. Mounting Provisions

Four mounting points on the base of the NxtGen Transport Incubator are provided to mount the Transport Incubator to an interface that will securely fix the Transport Incubator system in a hospital setting or emergency vehicle as appropriate. Four 3/8”-24 bolts (or equivalent) may be used to secure the incubator from the bottom, or the adapter nuts may be removed to allow for bolting from the top side. Access to mounting holes from the top is internal to the incubator and may be limited by installed devices. It is the customer’s responsibility to ensure that any safety requirements have been addressed on the installation. Unless otherwise specified, maximum additional equipment weight is limited to 10 kg per auxiliary equipment bay and 10 kg on the shelf. Dimensions are approximate and vary depending on the configuration of the system.

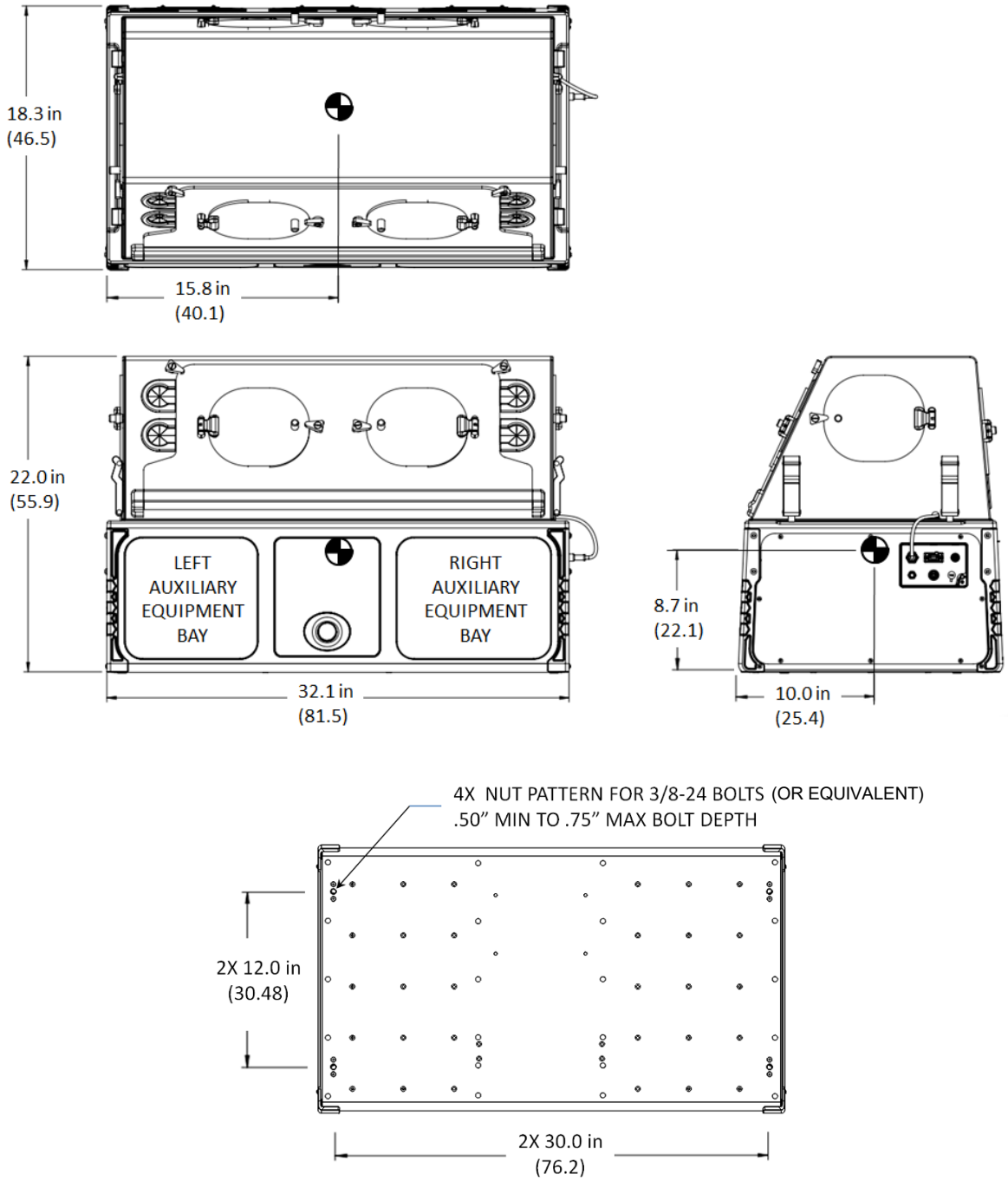


**Figure 2-1**

# 3. SYSTEM OVERVIEW

The NxtGen Transport Incubator is an electromechanical system designed to thermally support a neonatal patient during intra-facility or inter-facility transfer. The system may be used within the hospital, in transport vehicles, or in aeromedical applications such as fixed wing or rotorcraft. The NxtGen Transport Incubator has undergone safety testing against ISO standards 60601-1-12 and 60601-2-20 to demonstrate safety and stability in each of these use environments. To ensure safety and stability of the device during transport, use only as directed.

The Transport Incubator circulates warmed air throughout the infant chamber to regulate the thermal environment at an operator-selected temperature set point. Access to the infant is provided through the main patient door and hand ports located on all sides of the infant chamber. The operator provides input to the control system through the user interface which is comprised of a touch screen and a press-and-turn knob. The user interface provides feedback on the thermal performance of the system and, optionally, patient $SpO_2$ data. A comprehensive system of visual and audible alarms helps ensure the patient's safety.

Patient positioning straps are provided to limit infant movement within the infant chamber. The infant should be strapped in the Transport Incubator at all times, if possible.

## 3.1. Physical Description

### 3.1.1. **Transport Incubator**

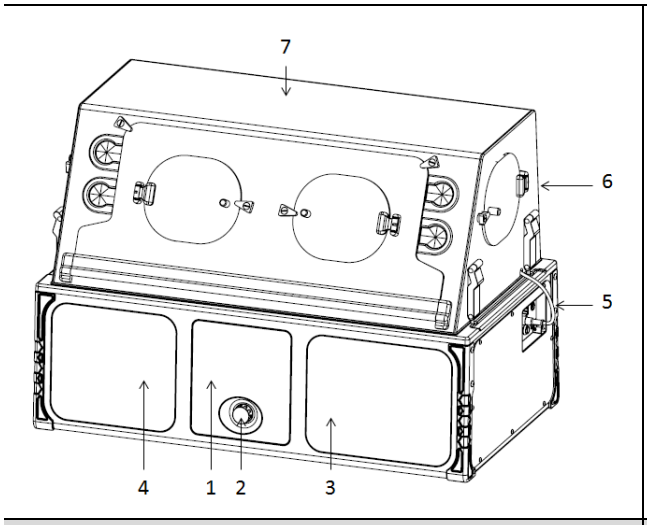


**Figure 3-1 Front ISO View**

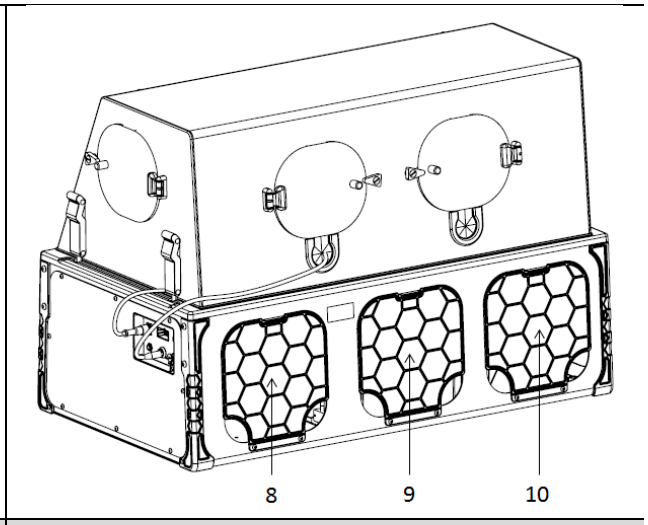


**Figure 3-2 Rear ISO View**

| Number | Description |
|---|---|
| 1 | Touch Screen User Interface |
| 2 | Press-and-Turn Knob |
| 3 | Auxiliary Equipment Bay - Right Side |
| 4 | Auxiliary Equipment Bay - Left Side |
| 5 | Patient Connector Panel |
| 6 | Infant Chamber |
| 7 | Observation Light Bar (Optional Observation/Phototherapy Light Bar) |
| 8 | Auxiliary Equipment Bay Rear Access Door |
| 9 | Rear Electronics Rear Access Door |
| 10 | Auxiliary Equipment Bay Rear Access Door |

### 3.1.2. **Rear Electronics Panel**

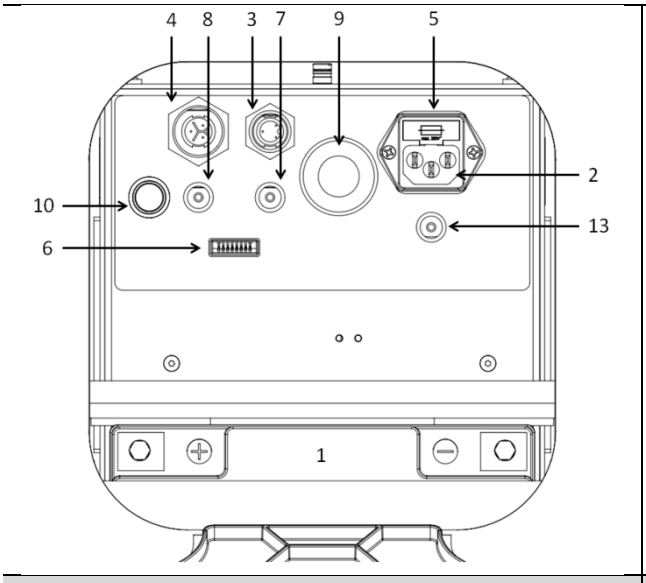


**Figure 3-3**

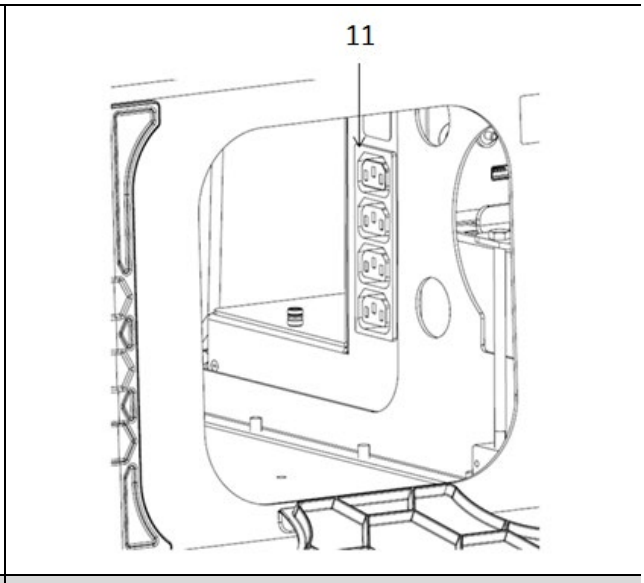


**Figure 3-4**

| Number | Description |
|---|---|
| 1 | Battery |
| 2 | AC Power Input Connector |
| 3 | External DC Power Output Connector |
| 4 | External DC Power Input Connector |
| 5 | AC Fuses (2 ×) |
| 6 | Data Key Receptacle |
| 7 | DC Circuit Breaker (Output Power) |
| 8 | DC Circuit Breaker (Input Power) |
| 9 | Battery Cable Grommet |
| 10 | Reset Switch |
| 11 | AC Power Output Receptacles (4) - Right Side |
| 12 | AC Power Output Receptacles (4) - Left Side (Not Pictured) |
| 13 | AC Breaker (MSO Power) |

### 3.1.3. **Patient Connector Panel (Located on left or right end panel)**

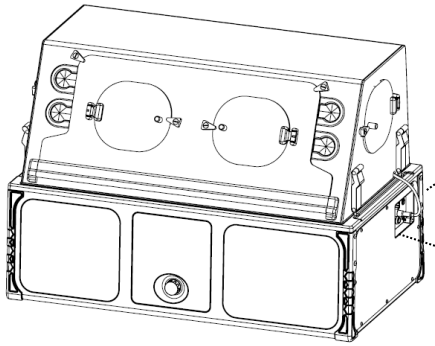

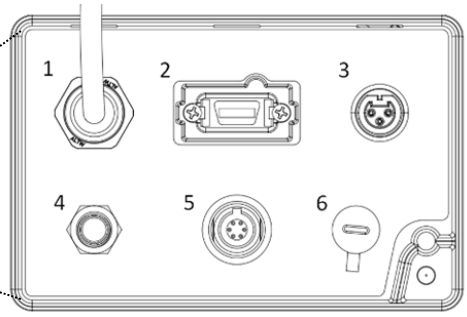


| Figure 3-5 | Figure 3-6 |
|---|---|

| Number | Description |
|---|---|
| 1 | Observation Light Connector (Optional: Observation/Phototherapy Light Bar) |
| 2 | Pulse Oximeter Connector (Optional: Masimo, Nellcor, or None) |
| 3 | T1 Patient Temperature Connector (Primary) |
| 4 | T2 Patient Temperature Connector (Secondary) |
| 5 | Heated Mattress Connector (Optional) |
| 6 | Ambient oxygen monitor Connector |

## 3.2. System Power

The Transport Incubator can be powered from several sources: external AC, external DC, or from the device's internal battery.

**CAUTION:** Verify temperature and oxygen settings after power outage, battery disconnection, or change in power supply.

### 3.2.1. **AC Power**

AC power can be supplied using 100-240 VAC, 50-60 Hz at approximately 10 A (3 A max for the device and 7 A to provide power for the accessory outlets). When operating on AC power, the AC Power indicator will be displayed. AC power has priority over all other power sources, external or internal. AC power should be used whenever available, but definitely for warming the Transport Incubator in preparation for transport and also to recharge the battery.

The incubator provides Class II protection, but also allows for the physical connection of Class I accessories via the multiple socket outlets. The third pin provided on the AC input is distributed to the AC outlets and is a functional earth.

### 3.2.2. **DC Power**

DC power can be supplied using 12-28 VDC at 15 A. When operating on DC power, the DC Power indicator will be displayed. External DC power is supplied through a 3 conductor circular connector located on the back of the Transport Incubator. DC power has priority over internal battery power.

### 3.2.3. **Battery Power**

Battery power will automatically be selected when neither AC power nor DC power are available. When operating on internal battery, the Battery Power indicator will be displayed. Connecting AC or DC power will supersede battery power operation. The battery will be charging when the Transport Incubator is connected to AC or DC voltage above 15 VDC. When charging, the green BAT CHG indicator will be shown. The rate at which the battery charges decreases when the Transport Incubator is powered on. A significantly low AC line voltage will also decrease the rate of battery charge. It takes approximately 4.5 hours to fully charge a completely discharged standard 26 ampere-hour battery when the Transport Incubator is supplied AC power and is powered down. If the Transport Incubator is on and warming up, the battery charge time is longer. The Transport Incubator will maintain an infant chamber temperature of 37° C for 4 hours on a fully charged battery with an ambient temperature of 20° C. When operating on battery power, the Display Screen will indicate the state of charge of the battery as an estimated percentage (to the nearest 5%). A fully charged battery will display 100% and a battery which has almost reached its safe discharge level will display 0%. When the Transport Incubator is operating from battery power or external DC power, the Main Display Screen will display state of charge of the battery, if the BAT OP indicator is touched. When the “Critically Low Battery” alarm is signaling, the incubator has approximately 10 minutes of operational time left.

For general operation, the use of external AC or DC power is HIGHLY RECOMMENDED. The internal battery should be used only when the Transport Incubator has no other energy source available.

## 3.3. External Power Connections

### 3.3.1. **External AC Power**

Plug the device into a properly rated AC outlet.

| | |
|---|---|
| 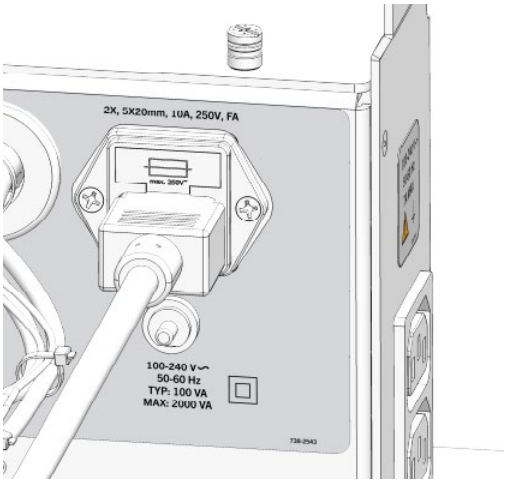 | The external AC power connection is located on the rear center console. |

### 3.3.2. **External DC Power**

DC power is supplied through the DC cable with the listed polarity.

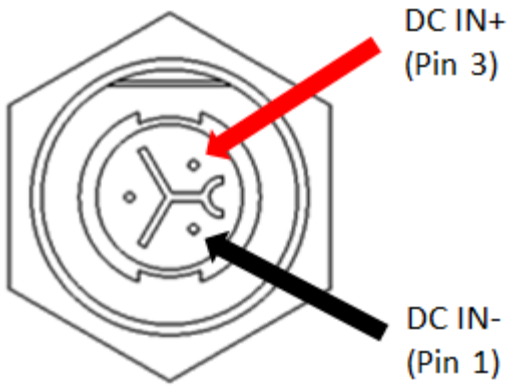


### 3.3.3. **Multiple Socket Outlets**

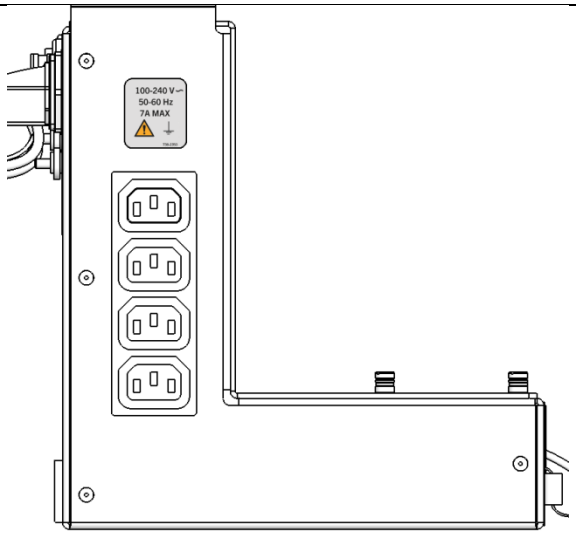


**Figure 3-7**

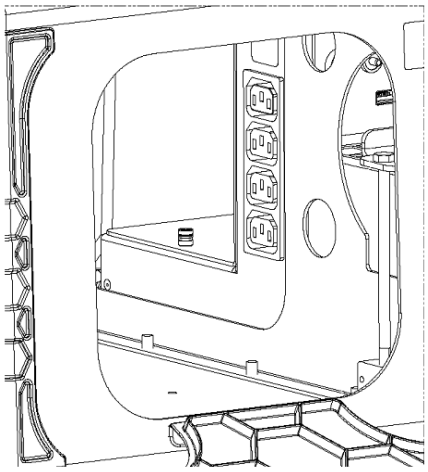

**Figure 3-8**

The multiple socket outlet supplies power only when External AC power is connected to the Transport Incubator. The multiple socket outlets can supply 7 A of current at the same AC voltage as the external AC power for connection of accessory devices. The third pin provided is functional earth not protective earth.

### 3.3.4. **DC Power Outlet**

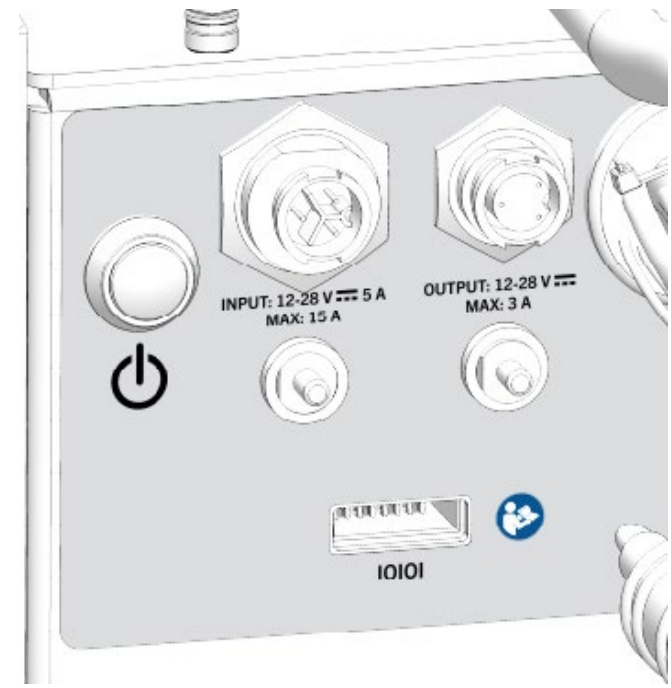


The DC power outlet supplies power only when External DC power is connected. The DC power outlet supplies up to 3 A of current at the same DC voltage as the external DC power for connection of accessory devices.

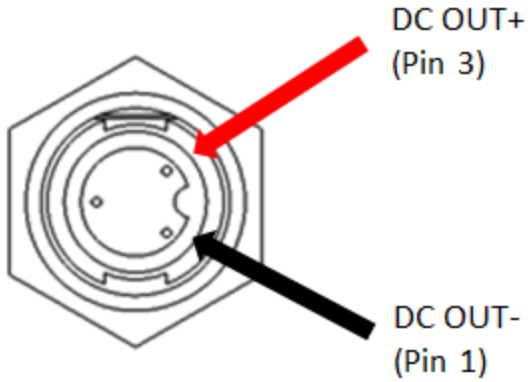


## 4. PRE-USE CHECKOUT

### 4.1. Pre-Use Checkout

The following Checkout should be performed prior to each use by knowledgeable operator or service personnel.

#### 4.1.1. **Operational Check**

1. Check the AC power cord and ensure that there are no cuts or severe bends in the cord, that all prongs on the plug are in good condition, and that the cord is securely fastened in place. Replace the cord as needed.
2. With the Transport Incubator connected to AC power, press the wheel (**Figure 3-1**, item 2) to turn the Transport Incubator on. The Transport Incubator will perform a Power On Self-Test and test the audible alarm. Ensure the Power On Self-Test progress bar is displayed, and that the audible alarm can be heard. Verify the AC power icon and battery power icon is displayed in the upper left hand corner after completion of the test.
3. Ensure the Power On Self-Test Results, under the message center, shows PASSED.
4. Place a hand inside the left side of the infant chamber and verify air flow. The fan should be able to be heard at the right side of the Transport Incubator.
5. Disconnect the AC power connection from the Transport Incubator and observe that the battery icon and battery percentage is displayed in the upper left hand corner. Verify the battery is adequately charged for the transport.
6. Confirm that the Main screen displays the infant chamber air temperature.

7. If external DC power is to be used, check the DC power cord and ensure that it has no cuts or severe bends and that the connectors have not been damaged.
8. Turn on suction device (if applicable) and ensure it operates. Turn off suction device.
9. Inspect the mattress and positioning straps for damage. Repair or replace as needed.

4.1.2. **Infant Chamber Check**

1. Ensure that the infant chamber is free from cracks.
2. Ensure that the gasket between the chambers and airflow tray is in place. Check that the grommets in the tubing through-holes on the infant chamber are also in place.
3. Ensure that the infant chamber is secured to the Transport Incubator with the two latches on both ends of the infant chamber.
4. Ensure that the infant chamber is clean and ready for transport.

4.1.3. **Accessories**

1. Test operation of other accessories as indicated by manufacturer's recommendations.

4.1.4. **Sensors and Cables**

1. Inspect the oxygen sensor and the pulse oximeter sensor for damage. Replace, if necessary.
2. Inspect the temperature probe cables, heated mattress cable, oxygen sensor cable, and pulse oximeter cable for wear or damage. Replace, if necessary.

## 5. OPERATING INSTRUCTIONS

This section contains operating procedures for the Transport Incubator. The device should be operated with external power whenever possible. The internal battery should be fully charged prior to use by connecting the unit to AC power for at least 8 hours. When not in use, the Transport Incubator should be plugged into an AC power source in order to recharge the battery.

### 5.1. Power On

The operator controls the device through the user interface which is comprised of a touch screen and a press-and-turn knob. To power on the device, push the wheel located below the touch screen to initiate the boot up sequence. The device will execute a self-test routine and the audible alarm/alert speaker will initiate a test of the audio system.

### 5.2. Power On Self-Test

The Transport Incubator performs a Power On Self-Test during boot up. The results of the Power On Self-Test are displayed on the left side of the pre-heat screen. If all tests were passed, the word "PASSED" will be displayed. If a test was not passed, a message will be displayed indicating the error. Refer to Section 20. for troubleshooting support.

## 5.3. Pre-Heat Mode

Once the boot up sequence is complete, the device will enter Pre-Heat mode. Pre-Heat mode allows the device to be warmed to a predetermined set point and maintain that set point indefinitely, or until one of the following occurs:

- Device enters normal operation
- Device enters the Administrator Menu
- Device enters the Service Menu
- Device is turned off

The Pre-Heat mode set point default is 36.0° C and can be changed within the administrator menu. During Pre-Heat mode, all alarms and alerts are disabled. Admitting a patient is not allowed in Pre-Heat mode. Pre-Heat mode is intended to act as a "ready" state by ensuring the device is pre-heated and prepared to admit a patient.

**Pre-Heat Screen**

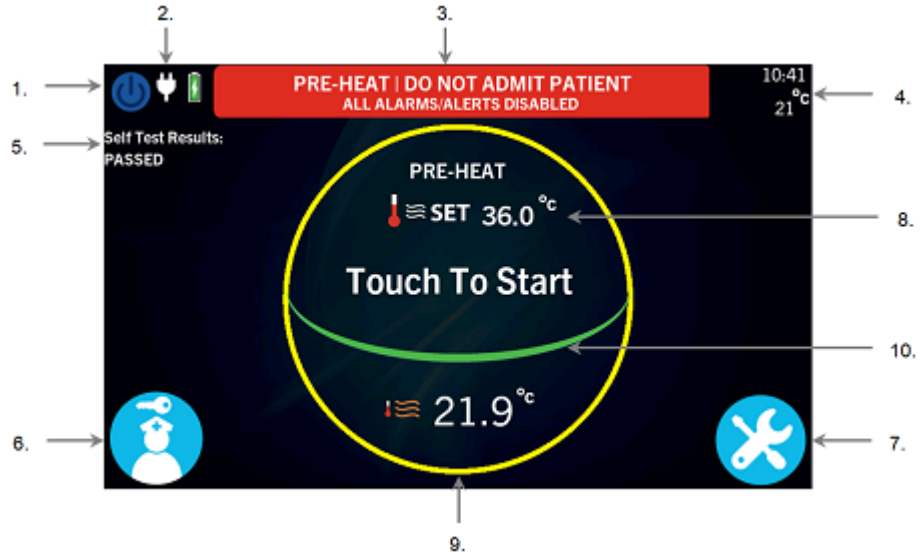


**Pre-Heat Screen Features:**

1. Power ON/OFF
2. Power Mode Status
3. Message Center
4. Time (24 hr.) & Ambient Temperature
5. Power On Self-Test Results
6. Administrator Menu
7. Service Menu
8. Pre-Heat Set Temperature
9. Active Chamber Airflow Temperature
10. Heater Power (0 - 100%)

## 5.4. Administrator Menu

The Administrator menu can only be accessed through the Pre-heat menu. To enter the Administrator Menu, touch or use the wheel to highlight and select the administrator icon. The Administrator Menu is a password protected menu intended to be accessed by senior level staff to set the device preferences. The following submenus are present within the Administrator Menu:

- Clock
- Limits
- Log
- Config
- About
- PulseOx (Optional)

**Administrator Menu Screens**

| | |
|---|---|
| 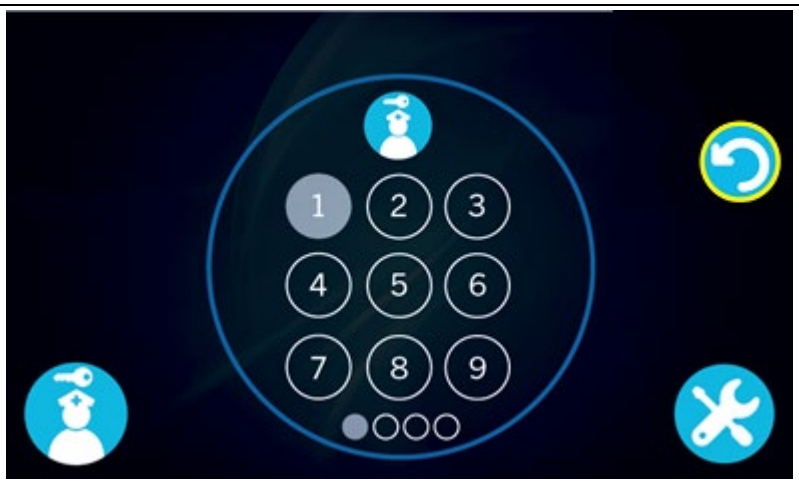 | Administrator Menu Access:<br>To access the administrator menu, touch or use the wheel to highlight and select the 4 digit password.<br>Administrator Menu Password:<br>1258<br>Once the correct password is entered, the device will enter the Administrator Menu.<br>Touch or use the wheel to highlight and select the return icon if you wish to revert back to the Pre-Heat screen. |
| 1. 2. | Administrator Menu Features:<br>1. Submenu Selections<br>2. Return Icon |
| | Clock:<br>To change the device's time and date, select the submenu icons by touch or with the control wheel.<br>Use the control wheel to adjust the icon's value.<br>Confirm the value change by pressing the control wheel or touching the selected icon. |

Alarm Limits:
To change the device's alarm limit presets, select the submenu icons by touch or with the control wheel.
Use the control wheel to adjust the icon's value.
Confirm the value change by pressing the control wheel or touching the selected icon.
Admin Limit Range:
$SpO_2$ - Low 50-99, High 51-100
Heart Rate - Low 25-229, High 26-230
$\%O_2$ - Low 18-99, High 19-100

Alarm Limits: Restore Factory Defaults
To reset the device's alarm limit presets back to the factory default values, select the factory reset icon by touch or with the control wheel.
Selecting the confirm icon will initiate the reset. Selecting the cancel icon will abort the change.
Factory defaults:
$SpO_2$ - Low 85, High 100
Heart Rate - Low 100, High 200
$\%O_2$ - Low 21, High 98

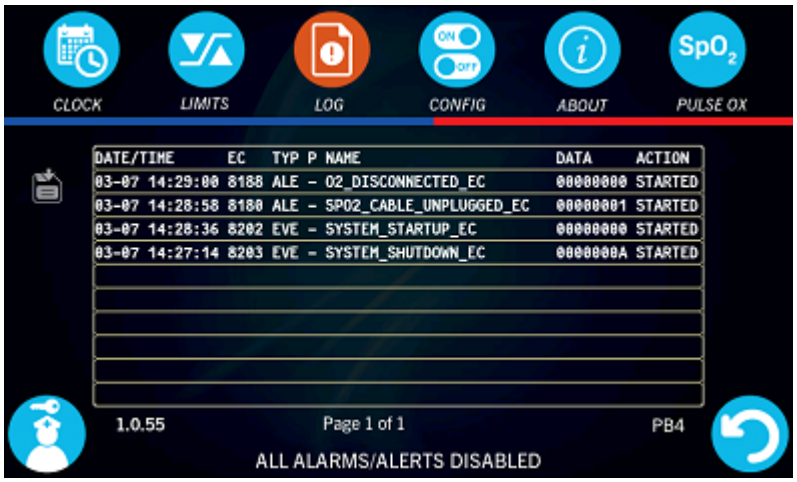


Event Log:
System events will be displayed in sequential order.
The up and down arrows can be used to cycle through older events.
The most recent 1000 events will be stored in the Event Log.

Configuration:
To change the configured accessories or the Pre-Heat Temperature set point, select the submenu icons by touch or with the control wheel.
Use the control wheel to adjust Pre-Heat Temperature set point's value.
Use the control wheel to adjust the minimum alarm volume available to the operator.
Confirm the value change by pressing the control wheel or touching the selected icon.

About:
The device's serial number, software revision number, (Formatted as 'X.Y.Z'
X = Major-revision
Y = Minor-revision
Z = Patch-revision),
date of manufacturing,
and $SpO_2$ revision (if configured) are displayed.
International Biomedical's contact information is provided.

PulseOx - Nellcor (Optional):
To change the device's pulse oximetry settings, select the submenu icon by touch or with the control wheel.
Use the control wheel to adjust the icon's value.
Confirm the value change by pressing the control wheel or touching the selected icon.

Sensitivity:
The normal response mode reports changes to a patient's $SpO_2$ measurement within 4-7 seconds under interference-free conditions.
The fast response mode reports changes to a patient's $SpO_2$ measurement in less than 4 seconds under interference-free conditions.

PulseOx - Masimo (Optional): To change the device's pulse oximetry settings, select the submenu icons by touch or with the control wheel. Use the control wheel to adjust the icon's value. Confirm the value change by pressing the control wheel or touching the selected icon.

Sensitivity

The sensitivity mode setting allows the clinician to adapt the $SpO_2$ measurement sensitivity to the patient's level of $SpO_2$ signal strength and quality at the measurement site. Options are Normal, Adaptive, Probe Off Detection (APOD), and Maximum.

Averaging Time

The averaging feature allows the clinician to select the desired level of visibility to subtle variations in the measured value. Depending on the patient acuity and area of care, shorter averaging times are sometimes preferred (sleep testing) over longer averaging times (telemetry & neonates) and vice-versa. 8-second averaging is generally considered the most common averaging interval and recommended for most patients since it is short enough to provide visibility to subtle desaturations while also being long enough to minimize major changes in $SpO_2$ due to quick, transitory desaturations.

Options are:

- 2-4
- 4-6
- 8 (Default)
- 10
- 12
- 14
- 16

Perfusion Index

Selecting "On" will display the perfusion index on the operator display.

BPM Tone

Selecting "On" will enable the BPM tone audio.

Smart Tones

If BPM Tone is enabled, selecting "On" will enable smart tones.

FastSat

Selecting "On" will enable FastSat providing rapid response to, and display of, fast changes in $SpO_2$ by giving priority to the most recent data.

| | |
|---|---|
| 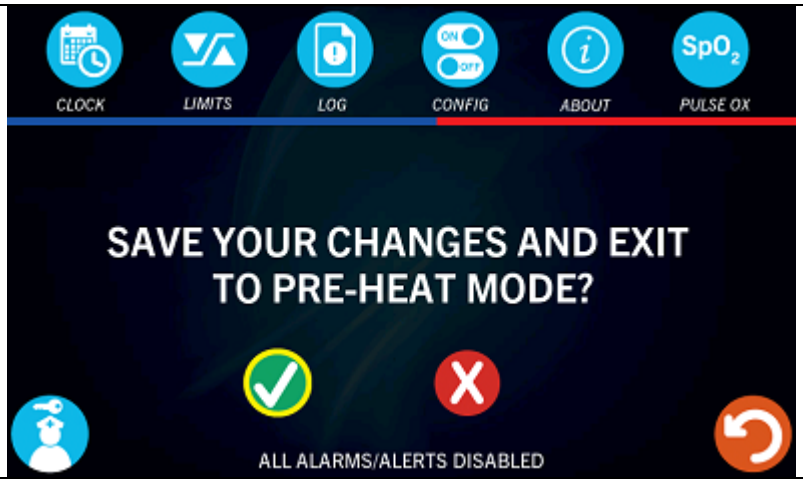 | Administrator Menu Exit:<br>Touch the return icon to return to the Pre-Heat screen.<br>If changes have been made, a dialog will open before transitioning to the Pre-Heat screen.<br>Touching the confirm icon will save all changes made.<br>Touching the cancel icon will not save any changes made. |

5.5. Service Menu

The service menu can only be accessed through the Pre-heat menu. To enter the Service Menu, touch or use the wheel to highlight and select the service icon. The Service Menu is a password protected menu intended to be accessed by authorized Biomedical Technicians. The following submenus are present within the Service Menu:

- Clock
- Heater
- Battery
- Log
- About
- Language

| Service Menu Screens | |
|---|---|
| | Service Menu Access:<br>To access the service menu, touch or use the wheel to highlight and select the 4 digit password.<br>Service Menu Password: 3258<br>Once the correct password is entered, the device will enter the Service Menu. Touch or use the wheel to highlight and select the return icon if you wish to revert back to the Pre-Heat screen. |

| | |
|---|---|
| | <u>Service Menu Features</u>:<br>1. Submenu Selections<br>2. Return Icon |
| | <u>Clock</u>:<br>To change the device's time and date, select the submenu icons by touch or with the control wheel.<br>Use the control wheel to adjust the icon's value.<br>Confirm the value change by pressing the control wheel or touching the selected icon. |
| | <u>Calibration</u>:<br>To calibrate the device heater, battery or suction, select the submenu icons by touch or with the control wheel. |

| | |
|---|---|
| | Heater Calibration:<br>**Manual Calibration**<br>Place a calibration probe 10 cm above the center of the mattress.<br>Touch or select the Play Button with the wheel to begin calibration.<br>**Auto Calibration**<br>Touch the “Enable Auto Calibration” icon to enable auto heater calibration.<br>Ensure heater calibration probe is connected to the T2 port in the connector panel.<br>Place the calibration probe on the center of the mattress.<br>Touch or select the Play Button with the wheel to begin calibration. |
| | Heater Calibration:<br>The device will heat the chamber to 36.0° C. This will take approximately 45 minutes. |
| | Manual Heater Calibration:<br>Use wheel to change the value on the screen to the temperature measured by the calibration probe. |

| | |
|---|---|
| | <u>Auto Heater Calibration</u>:<br>If the calibration is within an acceptable range, the offset will be saved and calibration will be complete. |
| | <u>Fuel Gauge Calibration</u>:<br>**Battery Type**<br>Review the “BATTERY TYPE” widget and confirm the type is correct.<br>SLA (Sealed Lead Acid)<br>$LiFePO_4$ (Lithium Iron Phosphate)<br>**Battery Capacity**<br>To change the device’s battery capacity, select the submenu icon by touch or with the control wheel.<br>Use the control wheel to adjust the icon’s value.<br>Confirm the value change by pressing the control wheel or touching the selected icon.<br>**Fuel Gauge Calibration**<br>To start the device’s Fuel Gauge calibration, select the play button by touch or with the control wheel. The battery must be fully charged before battery calibration can occur. Calibration should be performed with 2 or more chamber doors open.<br>Follow onscreen directions. |

| | |
|---|---|
| 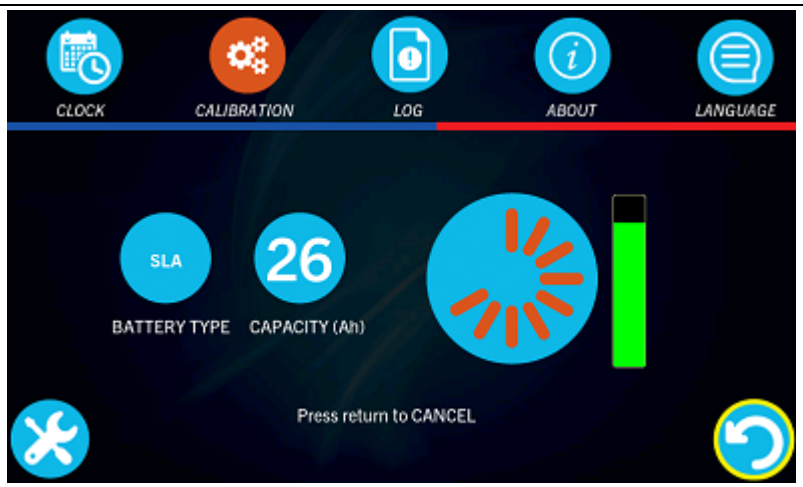 | Fuel Gauge Calibration:<br>The system will fully discharge the battery, and then recharge it completely to measure capacity. This process will take approximately 8 hours.<br>At any time, pressing the return icon will cancel the calibration and accept the default capacity selected.<br>Note that the actual capacity may vary based on battery age and discharge history. |
| | Fuel Gauge Calibration:<br>When the calibration ends, the measured approximate battery capacity will be displayed.<br>The battery capacity will be updated.<br>Leave the Transport Incubator connected to External Power. |
| 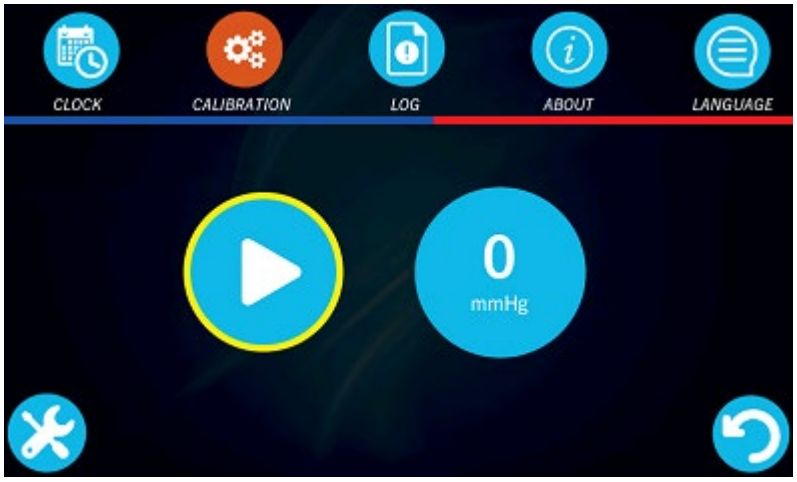 | Suction Calibration:<br>To start the device's suction calibration, select the play button by touch or with the control wheel. |

Suction Calibration:
The system will turn on the suction device and display the current suction pressure. Increase the suction pressure up to 163 mmHg, the suction relief valve should engage and decrease the pressure to the relief valve's calibrated value (160 mmHg).

Event Log:
System events will be displayed in sequential order. The up and down arrows can be used to cycle through older events.

About:
The device's total active time will be displayed.
If configured, the heated mattress, suction monitor, and phototherapy active time will be displayed.
The factory configuration will be displayed.
International Biomedical's contact information is provided.

| | |
|---|---|
| | <u>Language</u>:<br>To change the device's language, select the supported language icon by touch or with the control wheel.<br>The page up and down arrows can be used to view all supported languages.<br>The default language is English. |

## 6. NORMAL OPERATION

To begin normal operation of the device, touch anywhere in the center circle to exit Pre-Heat mode and enter the main screen.

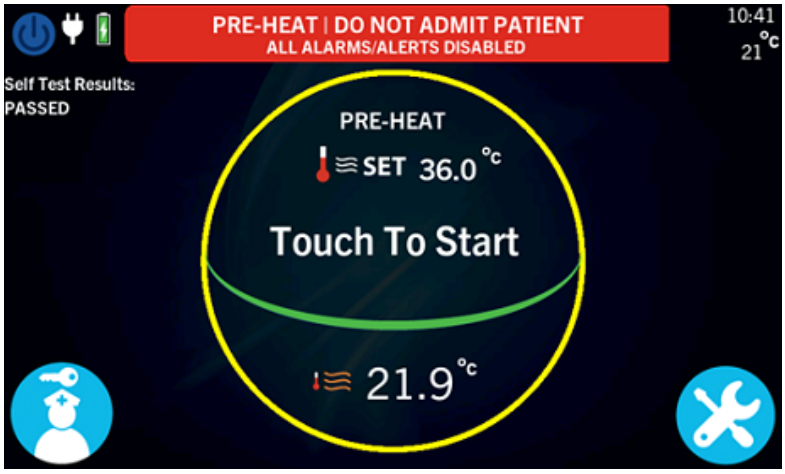


**Figure 6-1**

**Main Screen**

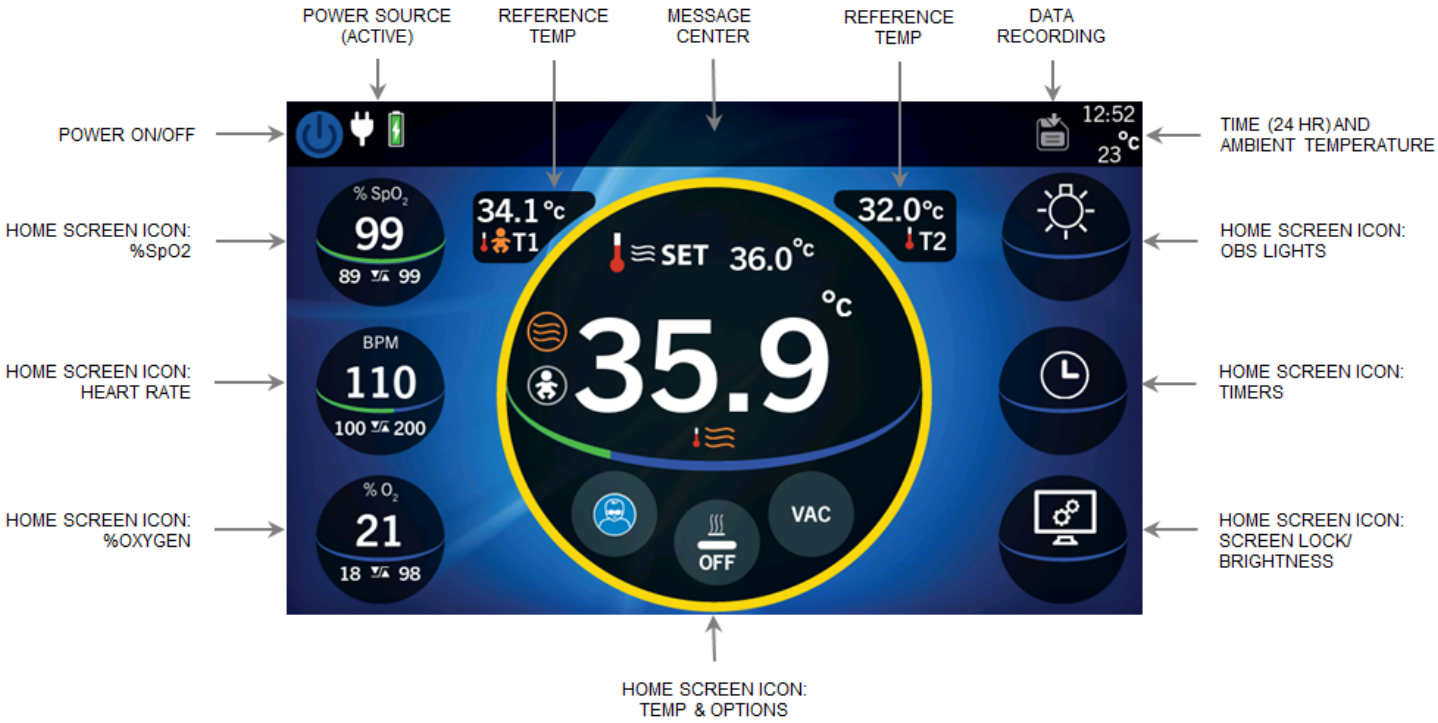


**Figure 6-2**

### 6.1. Main Screen Navigation

Navigation about the main screen can be done either by touch or by highlighting and selecting an icon with the wheel. As a general rule, if the icon is circular, it can be selected by touch. The wheel acts as an alternative mechanism to navigate around the

main screen and select the desired icon. However, the wheel does not navigate to the message center or to any icons located at the top of the screen. The position of the wheel can be determined by the yellow cursor that highlights each selectable icon. The cursor will disappear after 10 seconds of inactivity and will reappear once the wheel is turned again. Icons will highlight orange to indicate to the operator that a selection has been made. While icons can be selected with touch, value changes can only be made by turning the control wheel.

| Wheel Navigation - Clockwise Rotation | Wheel Navigation - Counter-clockwise Rotation |
|---|---|
| | |
| Figure 6-3 | Figure 6-4 |

| Icon States | |
|---|---|
| Highlighted Cursor State:<br>The yellow cursor will provide visual feedback of the wheel's location to the operator. | |
| Selection Confirmed State:<br>Icons will highlight orange to provide a visual confirmation to the operator that the icon was selected. Selection confirmed state is momentary and the icon will move to the next state. | |
| Value Manipulation State:<br>If a value or icon is highlighted orange, that represents a variable which can be changed by turning the wheel. Values can only be manipulated by turning the wheel. | |
| Operator Disabled State:<br>The operator has the ability to disable certain features of the device, but not all features have the ability to be disabled. The features which can be disabled are listed below. To disable the feature, touch and hold the icon for approximately 2 seconds. To enable the feature, touch the icon or highlight and select with the wheel.<br><br>$SpO_2$ Monitor, Heart Rate Monitor, $\%O_2$ Monitor | 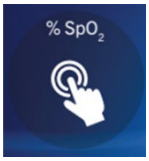 |

| | |
|---|---|
| <u>Operator Disconnected State</u>:<br>If the operator disconnects a cable which is associated with that feature, the icon will enter the operator disconnected state. The features which can be disconnected are listed below.<br><br>Observation Light, Phototherapy Light, Heated Mattress, $SpO_2$ Monitor, Heart Rate Monitor, $\%O_2$ Monitor | 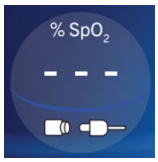 |
| <u>Submenu State</u>:<br>Once the operator selects an icon, the icon will enter the submenu state. The submenu state allows the operator to make active changes to the feature. The submenu state can be identified with the presence of the “X” icon. Once in a submenu state, the wheel is the only method of navigation and manipulation with one exception. At any time, the operator can touch the “X” icon to exit the submenu and return to the previous state. | |

## 6.2. Thermal Operation

| User Interface - Thermal Control Details | |
|---|---|
| 1) T1 Temperature (Primary)<br>2) Air Controlled Mode Icon<br>3) Servo Controlled Mode Icon<br>4) Heater Power (0-100%)<br>5) T2 Temperature (Reference)<br>6) Set Temperature<br>7) Active Temperature (Chamber or Patient)<br>8) Active Temperature Icon (Chamber or Patient) | <br> 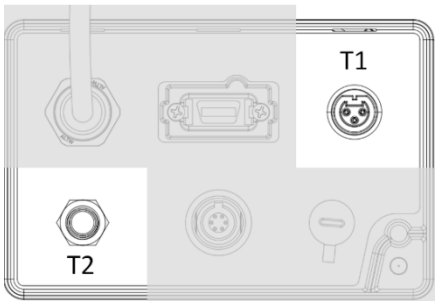 |

| Thermal Control Navigation | |
|---|---|
| Once the Thermal Circle is selected by touch or with the wheel, a blue “X” will appear at the top and an orange ring will persist around the circle to indicate to the operator they are in the thermal submenu. The wheel allows the operator to navigate around the submenu to the desired location. Circular icons like the two modes and the “X” are able to be touched. Navigation will continue to the optional icons in the bottom portion of the thermal circle if they are installed and enabled. | |

## 6.3. Thermal Control System Description

The Transport Incubator has two methods to control and maintain temperature to an operator selected set point: air (manual) controlled and servo (baby) controlled mode.

- The Air (Manual) Control mode controls the temperature inside the infant chamber by comparing the temperature measurement of the internal air temp sensor in the chamber with a setpoint temperature. The setpoint temperature is set manually by the operator. When operating in Air (Manual) mode, both T1 (recommended to be the temperature probe on the baby's skin) and T2 (optional secondary temperature probe) are reference temperature readings only and do NOT influence the temperature within the infant chamber.

- The Servo (Baby) Control mode controls the temperature inside the infant chamber based on the measurements of the skin temperature sensor connected to the T1 port on the incubator (and connected to the baby's skin). In Servo (Baby) Control mode, the temperature measured by the skin temperature sensor (T1) is displayed inside the large thermal control circle. When operating in Servo (Baby) Control mode, T1 must be connected or the incubator will revert back to Air (Manual) Control mode. The control algorithm within the incubator will use the Baby temperature (from the T1 sensor) to automatically adjust the air temperature inside the incubator in order to keep the patient at the desired set temperature (as set by the operator). The system makes gradual adjustments to the heater output based upon the real-time feedback from the T1 temperature sensor.

    - Caution: Only operate in Servo (Baby) Control mode when device is in a stable thermal environment.

T1 is the primary temperature control probe and is required for operation in servo control mode. T2 is a reference temperature only and is not required for operation in either mode. T2 is always positioned outside the thermal circle to visually represent to the operator it is a reference temperature and does not contribute to the thermal control system. If the system is placed in air controlled mode, T1 (if connected) will also be positioned outside of the thermal circle to visually represent to the operator it is acting as a reference temperature and does not contribute to the thermal control in air controlled mode. During servo controlled mode, T1 will be positioned within the thermal circle and represented by the large, active temperature measurement. Transitioning between each mode does require the operator to confirm the temperature set point immediately after a mode change.

## 6.4. Setup

In Air Controlled Mode, the Transport Incubator will alarm if the chamber temperature is more than 1.5° C away from the setpoint.

In Servo Controlled Mode, the Transport Incubator will alarm if the baby temperature (T1) is more than 0.7° C away from the setpoint.

If an alarm is active, the active temperature value will change color and an alarm message will be presented in the message center.

### 6.4.1. **Skin Temperature Probes**

T1 - The International Biomedical Skin Temperature probe is used to monitor the baby temperature and to provide feedback to the Transport Incubator control system. Select an appropriate site for monitoring according to currently accepted medical practices.

T2 - The International Biomedical Skin Temperature probe is used to provide a second infant temperature to the operator. This temperature is not used by the Transport Incubator system for any control.

| Thermal Control Operation - Air (Manual) Control Mode | |
|---|---|
| Touch or use the wheel to select the center circle and enter the submenu. | |
| The blue “X” will appear at the top of the circle and an orange ring will appear around the circle. Once in the thermal submenu, the cursor will default to the set temperature value. | |
| Use the wheel to select the set temperature value. The value will highlight orange and can now be changed by the operator with the wheel. | |

| | |
|---|---|
| Once the desired set point is reached, the operator can select with the wheel to confirm and accept the value. | |
| If Air Mode is used for a prolonged period, a skin temperature probe should be used to closely monitor the patient's temperature. Air Mode does not automatically adjust the heater output based on the infant temperature; therefore, close monitoring of the patient's temperature is recommended. | |
| The chamber temperature is displayed in the Main icon in the center of the main screen. | |

## Thermal Control Operation - Servo (Baby) Control Mode

| | |
|---|---|
| Touch or use the wheel to select the center circle and enter the thermal submenu. | 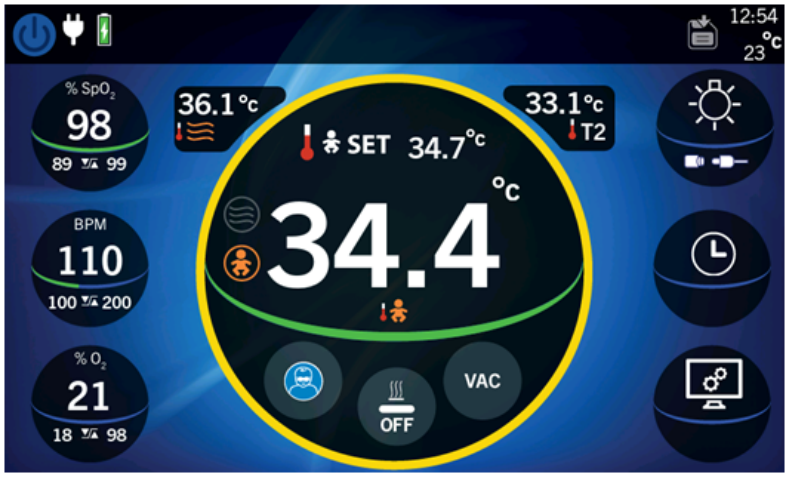 |
| The blue “X” will appear at the top of the circle and an orange ring will appear around the circle. Once in the thermal submenu, the cursor will default to the set temperature value. | 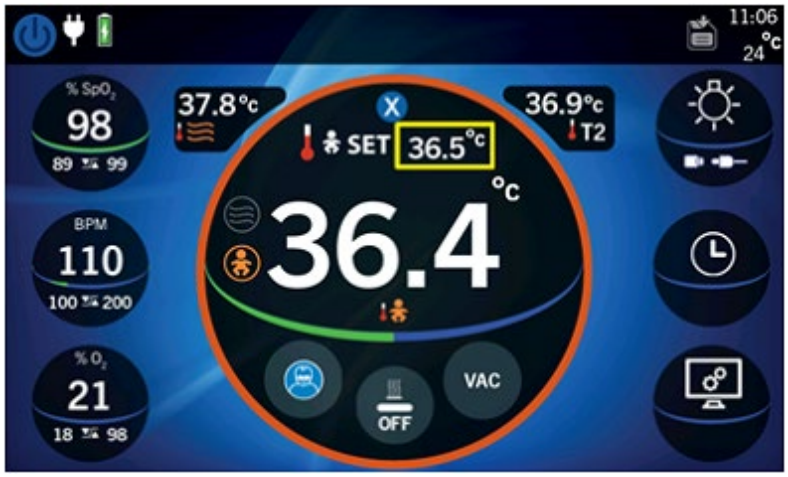 |
| Use the wheel to select the set temperature value. The value will highlight orange and can now be changed by the operator with the wheel. | |

| | |
|---|---|
| Once the desired set point is reached, the operator can select with the wheel to confirm and accept the value. | |
| Ensure the skin temperature probe is properly attached. A secondary temperature probe can be used to provide additional information about the patient's temperature. | 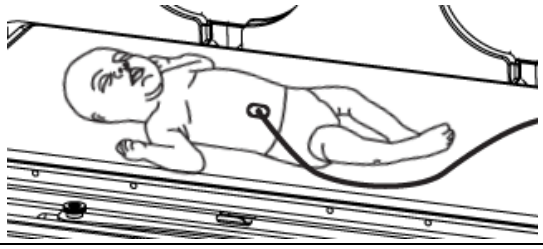 |
| The baby's measured temperature is displayed in the main icon in the center of the screen. | 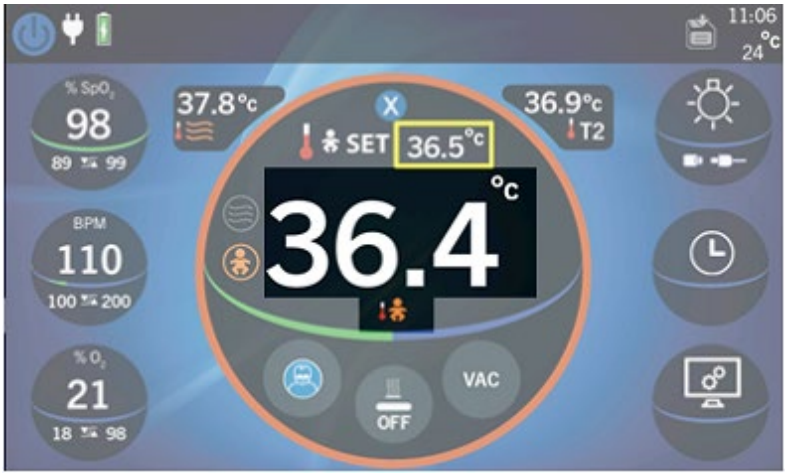 |

## Transitioning from Air Control to Servo Control Mode

| | |
|---|---|
| Touch or use the wheel to select the center circle and enter the submenu. | |
| Touch the circular servo mode icon or use the wheel to highlight and select it. | |
| The servo mode icon will highlight orange to confirm the selection and the T1 temperature value moves from outside the circle to the active temperature value inside the circle. The icon under the active temperature value and the icon next to the set temperature value changes to represent T1 and servo control mode. The air control icon is now inactive and grayed out. Chamber temperature moves to a reference position outside the circle. | |
| Once the mode is selected, an alert will show in the message center to “Mode Change - Set Temp”. The set temperature value is now highlighted and the value can be changed. Once the desired set temperature value is displayed, select the value with the wheel to confirm and save the set temperature.<br>Now the system is operating in servo control mode. | 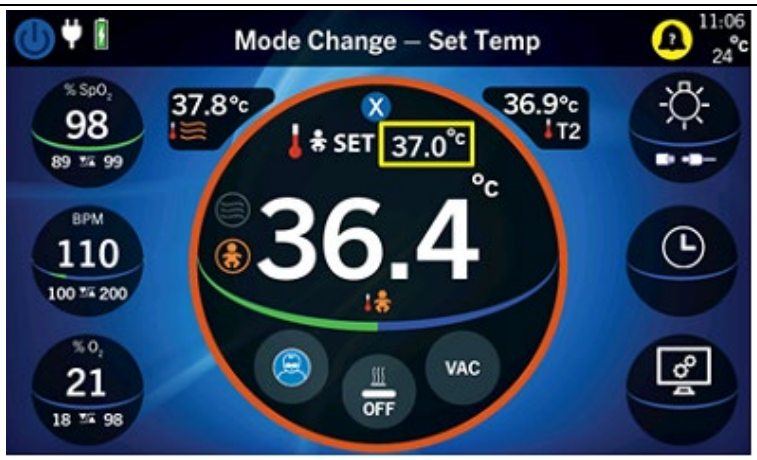 |

| Transitioning from Servo Controlled to Air Controlled Mode | |
|---|---|
| Touch or use the wheel to select the center circle and enter the submenu. | |
| Touch the circular air mode icon or use the wheel to highlight and select it. | |
| The air mode icon will highlight orange to confirm the selection and the active temperature value now represents the current chamber temperature. The T1 temperature value moves from inside the circle to a reference position outside the circle. The icon under the active temperature value and the icon next to the set temperature value changes to represent air mode. The servo control icon is now inactive and grayed out. | |
| Once the mode is selected, an alert will show in the message center to “Mode Change - Set Temp”. The set temperature value is now highlighted and the value can be changed. Once the desired set temperature value is displayed, select the value with the wheel to confirm and save the set temperature.<br>Now the system is operating in air control mode. | 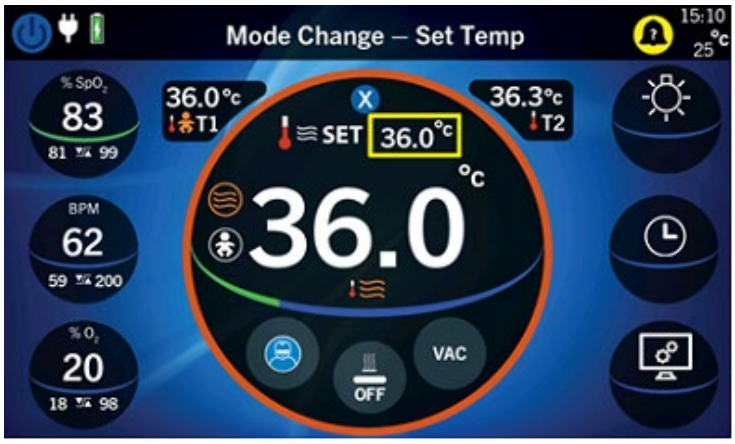 |

## 6.5. Admitting a Patient

Once you are ready to admit the patient, touch or select the “Touch to Start” icon in the center of the Pre-Heat screen and the system will enter normal operation mode. Disregard this step if the device is already in normal operation.

**WARNING:** **Do not admit the patient in Pre-Heat mode.**

Before admitting the patient, select and confirm the mode of thermal control and set temperature value.

**CAUTION:** After the patient is admitted, adjustments to the device operating parameters should not be made unless necessary.

| Steps to Admit a Patient | |
|---|---|
| Turn the two main chamber door latches located in the upper corners of the main door. Gently rotate the main chamber door down to the open position.<br><br>***NOTE:*** *Support the main door while opening to prevent the door from swinging into the device and causing damage.* | 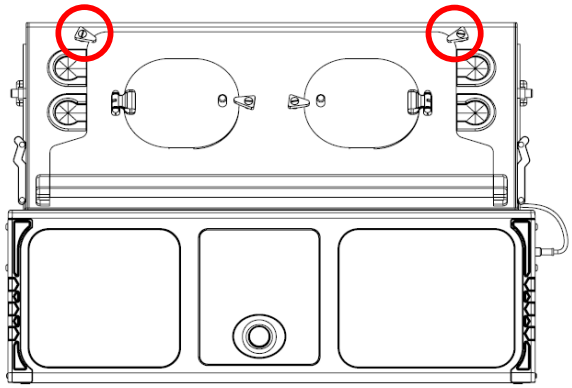 |
| Squeeze the red release lever and slide the patient tray out of the chamber until the tray locks into position.<br><br>***NOTE:*** *You will see two red levers on either end of the tray change from a horizontal position to a more vertical position when in the locked position.* | 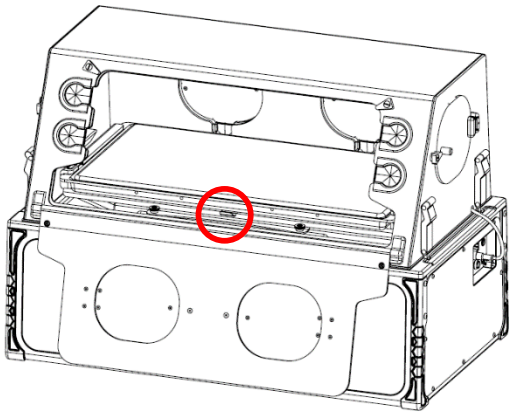 |
| Carefully place the patient on the center of the mattress with their head in the preferred orientation. | 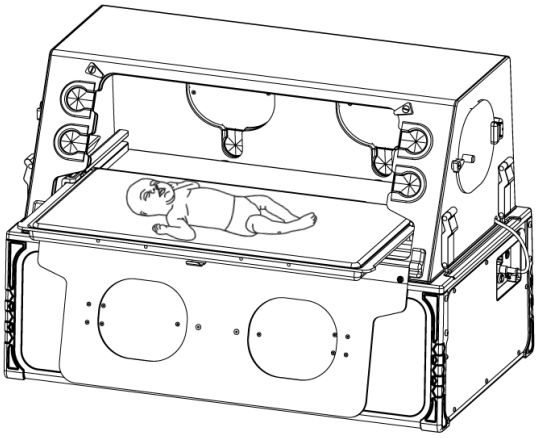 |

| | |
|---|---|
| Push the patient tray back into the chamber until the tray locks into position. Ensure the tray is locked by gently pulling it towards you to verify the lock has been engaged. | 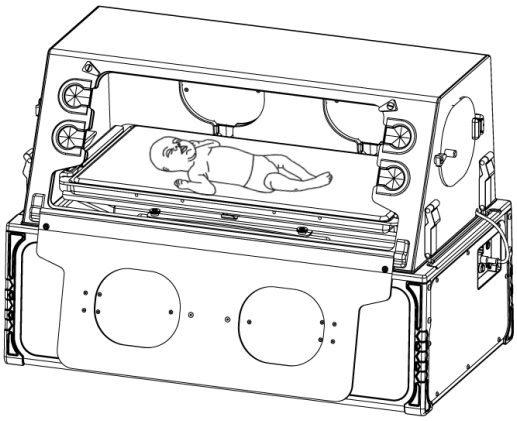 |
| Plug the temperature probe connector in to the appropriate temperature port, T1 or T2, on the patient connector panel. Route the cable and sensor through the lower grommet and apply the temperature probe sensor to the patient. | 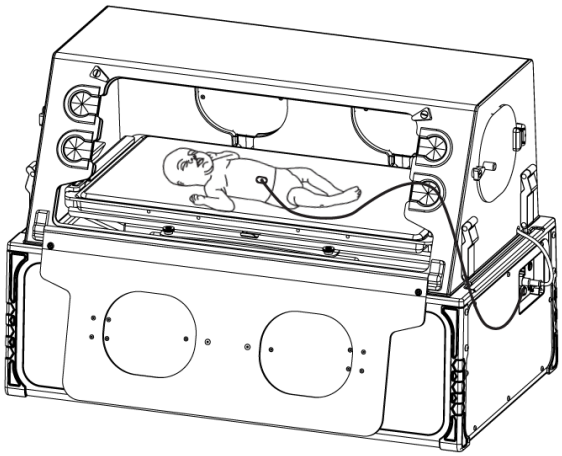 |
| <u>To apply the temperature sensor</u>: Clean the site of attachment with alcohol or lukewarm water before attaching the sensor. Attach the sensor to the anterior abdominal wall. | 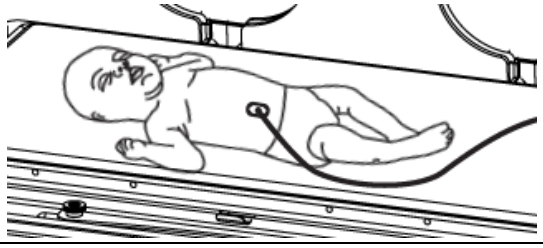 |

### 6.5.1. Patient Positioning Straps Installation and Application

The intended purpose of this strap is to prevent accidental falls of the newborn from the incubator. This strap is not intended as a DOT restraint device and will not provide any protection in the event of a vehicle/aircraft crash or rapid deceleration. This device should be viewed by the user as a positioning aid only. It is not intended to be a restraint of the body in whole or in part. The best protection of the infant comes from continuous patient observation during product use. This product is non-sterile. Never apply directly over patient skin. Place a blanket or other protective material between the strap and the patient's skin.

| Steps to Apply Patient Positioning Straps |
|---|
| Remove two (2) pairs of straps from the plastic packaging. |
| Pull on all tabs to ensure their integrity. Do not use if integrity is compromised. |
| Connect the two sections of the strap that have two tabs each into two separate mounting holes on the back of the bed tray inside the incubator. Position for patient's size. |
| Connect the two remaining straps (with only one tab each) into the corresponding mounting holes on the front of the bed tray. |
| When fastening the strap tab through the hole and back onto the foam, make sure that the hook and loop fastening material makes full contact with the foam material and is pressed firmly together for maximum contact. |
| The opposing straps can now be fastened across the patient, either straight or crisscrossed to form an "X" pattern. Press the hook and loop tab firmly to the foam material. |

**CAUTION:** Positioning straps are designed to be discarded after single patient use. Washing and reuse of this product may put sequential patients at risk for:

- Skin irritation (breakdown of material or retention of soaps and chemicals)
- Viral, bacterial, or fungal infection
- Falls due to weakening of the fastening material and base fabric

**CAUTION:** Keep all positioning strap material away from patient neck area. Tightness of the strap should not impede chest expansion in any way.

## 7. MESSAGE CENTER

### 7.1. Indicators

| Battery Charge Percentage | |
|---|---|
| Touching the power icon will display the current battery charge percentage to the nearest 5%. If the battery is not configured, the battery charge percentage will not be displayed. | |

| | |
|---|---|
| The battery charge percentage will be shown over the power off button for 3 seconds. | |

| Data storage Icon | |
|---|---|
| If the device is storing data to the Data Key, the data storage icon will be displayed. | |

| Time | |
|---|---|
| The device displays a 24 hour clock in the upper right hand corner. The clock can be configured from the administrator or service menu. | |

## 7.2. Power off the Device

| Physical Buttons | |
|---|---|
| Holding down the encoder wheel for 10 seconds will shut down the device. | 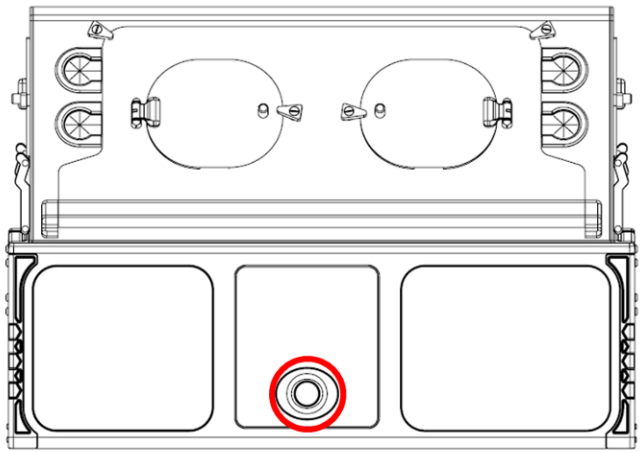 |
| Accessible from the rear center console, holding the reset button for 5 seconds will shut down the device. | 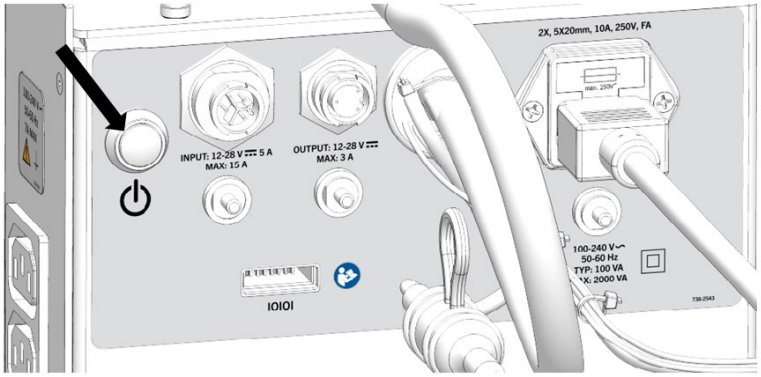  |

| User Interface | |
|---|---|
| Touching the power off icon will display a dialog menu. | |

| | |
|---|---|
| Touching the cancel icon (X) will return the operator to the previous screen. | |
| Touching the accept icon will shut down the device. | |
| Touching the pre-heat icon will transition the device into pre-heat mode. | |

## 8. GENERAL ALARM INFORMATION

The NxtGen Transport Incubator is equipped with an operator adjustable alarm volume.

On reboot of the Transport Incubator, or if the power to the Transport Incubator is interrupted for more than 15 minutes, all operator alarm settings will be reset to the Admin preset values.

### 8.1. Alarm Types

Operators and clinicians should be trained to recognize and respond appropriately to each type of audible signal or signal sound pattern. The audio speaker will be automatically tested upon each start. A full list of alarms and alerts can be found in **Appendix D**.

| | |
|---|---|
| <u>High Alarm</u>:<br>If a high alarm condition occurs, the alarm message will be displayed in the message center. The Alarm Bar will flash red. The parameter that is in an alarm state will be red, and if the high alarm is associated with an operator settable alarm limit, the alarm limit will turn red. | |
| <u>Medium Alarm</u>:<br>If a medium alarm condition occurs, the alarm message will be displayed in the message center. The message center will flash a yellow outline with a yellow hue. The parameter that is in an alarm state will be yellow, and if the medium alarm is associated with an operator settable alarm limit, alarm limit will turn yellow. | |
| <u>Low Alarm</u>:<br>If a low alarm condition occurs, the alarm message will be displayed in the center of the message center. The message center will display a yellow outline. If the low alarm is associated with an operator settable alarm limit, the measured value and alarm limit will turn yellow. | 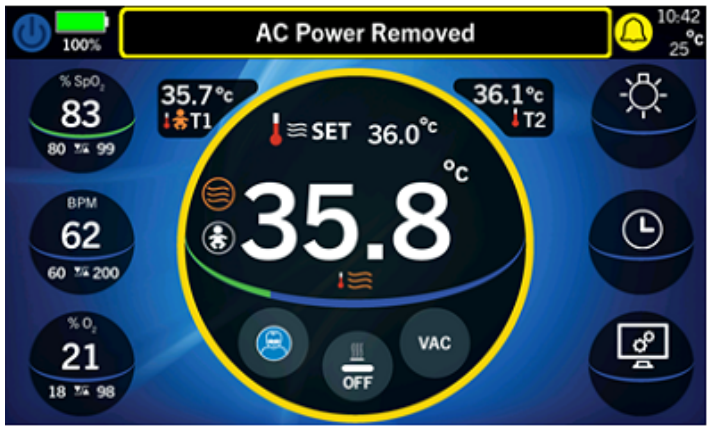 |
| <u>Alert</u>:<br>If an alert condition occurs, the alert message will be displayed in the message center accompanied with the default alert symbol. | 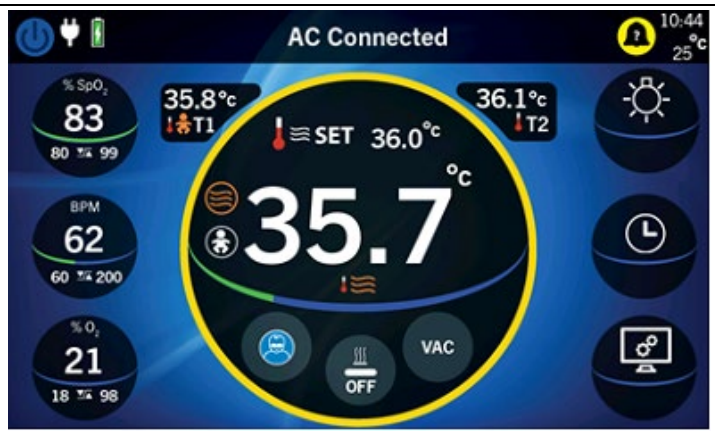 |

## 8.2. <u>Alarm Dropdown</u>

| | |
|---|---|
| 1. <u>Alarm Dropdown Icon</u>:<br>If multiple alarms or alerts are signaling simultaneously, the alarm dropdown icon (+) will appear in the right hand corner of the screen. | 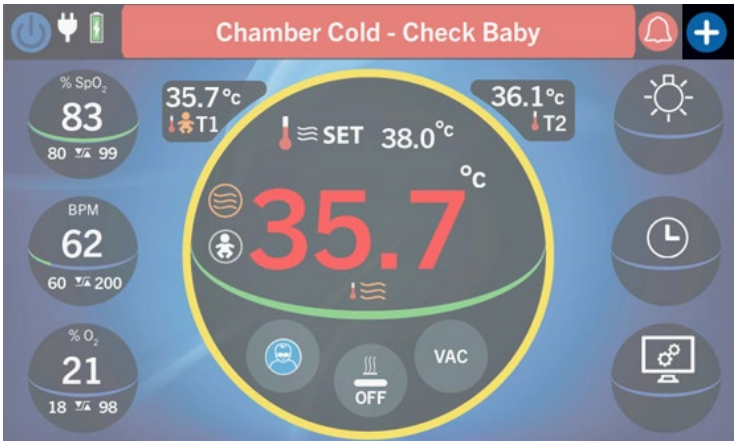 |
| Touch the alarm dropdown icon (+) to display up to 8 additional alarms and alerts. Each alarm will have a colored symbol next to its message to indicate its priority. Alerts will not have a shape next to their message. | 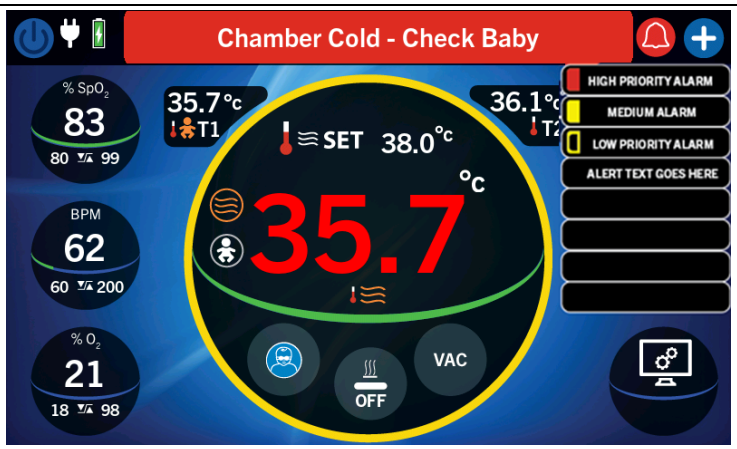 |

## 8.3. Alarm Audio Pause

| | |
|---|---|
| 1. Alarm Audio Icon:<br>To pause an active alarm, touch the Alarm Bar. | 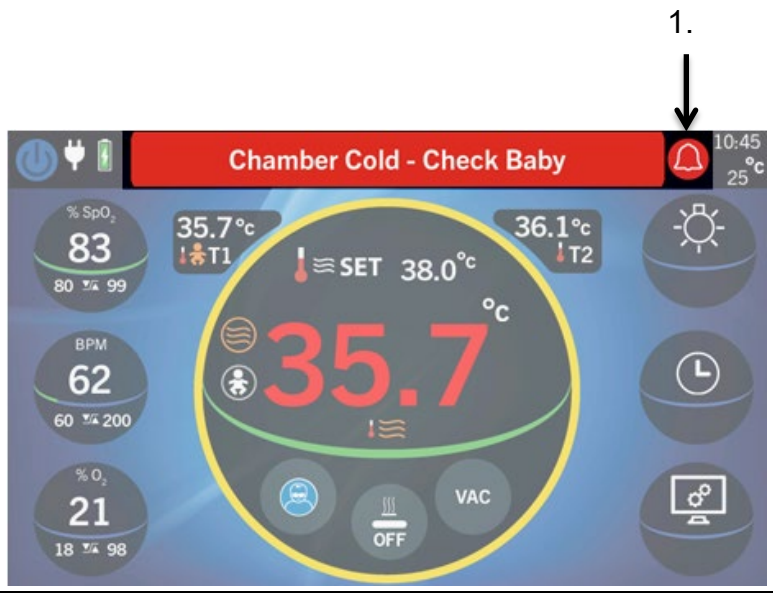 |
| The audio pause icon will be displayed to the right of the alarm message to indicate the alarm audio is paused.<br>The alarm audio will finish playing the current alarm audio, and then it will pause.<br>Touch the Alarm Bar to un-pause the alarm audio. If another alarm occurs while the active alarm's audio is paused, the alarm audio will become un-paused.<br>The duration of the Alarm Audio Pause is specific to the alarm, and is defined in the Alarm Table | 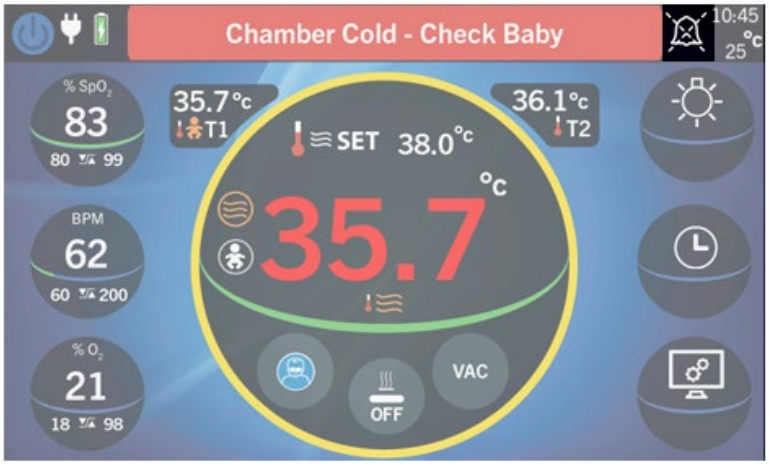 |

## 8.4. Technical Error

| | |
|---|---|
| If an error occurs that renders the device unsafe for use, a technical error screen will be shown. The technical error buzzer will sound until the device is shutdown or restarted using the reset button on the center rear console. | 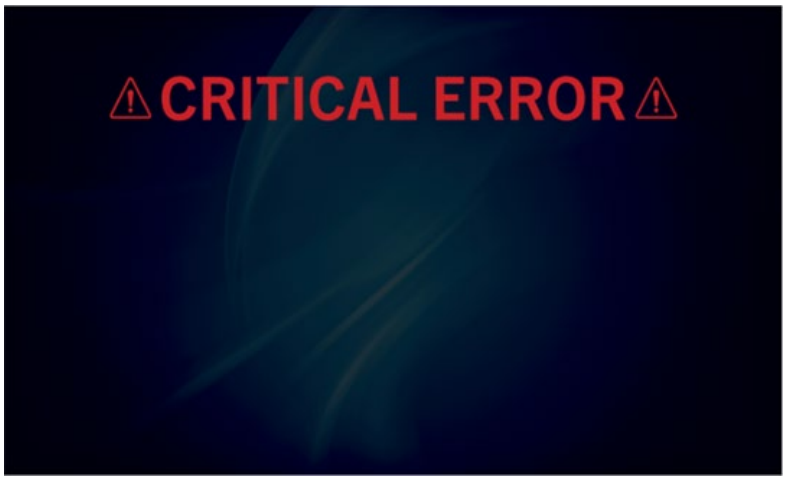 |

## 8.5. Alarm Verification

The function of the alarm system should be verified at least annually using the methods below.

The Alarm Audio (speaker) will be tested automatically each time the Transport Incubator is powered on.

### 8.5.1. Test of Temperature Alarms

| Alarm | Priority | Mode | Method |
|---|---|---|---|
| Baby Cold - Check Baby | Medium | Servo Mode | Place the T1 probe in the Transport Incubator, change the setpoint to be 0.8° C above T1. |
| Baby Cold - Check Baby | High | Servo Mode | Place the T1 probe in the Transport Incubator, change the setpoint to be 1.3° C above T1. |
| Baby Hot - Check Baby | Medium | Servo Mode | Place the T1 probe in the Transport Incubator, change the setpoint to be 0.8° C below T1. |
| Baby Hot - Check Baby | High | Servo Mode | Place the T1 probe in the Transport Incubator, change the setpoint to be 1.3° C below T1. |
| Connect Temperature Probe | Low | Servo Mode | Disconnect T1 from the Transport Incubator. |
| No Temp Probe - Exit Servo Mode | Medium | Servo Mode | Leave the Connect Temperature Probe alarm active for ~ 1 minute. |
| Chamber Hot - Check Baby | Medium | Air Mode | Set the chamber to 36° C. Allow the chamber to stabilize. Change the setpoint to 34.4° C. |
| Chamber Hot - Check Baby | High | Air Mode | With the chamber still at 36° C, change the setpoint to 33.9° C. |
| Chamber Cold - Check Baby | Medium | Air Mode | Set the chamber to 35° C. Allow the chamber to stabilize. Change the setpoint to 36.6° C. |
| Chamber Cold - Check Baby | High | Air Mode | With the chamber still at 35° C, change the setpoint to 37.1° C. |

### 8.5.2. Test of $SpO_2$ Alarms

To ensure the pulse oximeter is generating the proper alarm indications, perform the following:

1. After the sensor is attached to patient source (operator or simulator), verify the patient alarms are functional by setting the $SpO_2$ and pulse rate high and low alarm limits beyond the patient readings.
   a. An audible alarm should sound.
   b. An alarm message should be displayed in the message center on the screen.
2. Verify the sensor alarms are functional.
   a. Remove the sensor from the patient.
      i. An alert message should be displayed in the message center on the screen.

b. Disconnect the sensor from the Transport Incubator.

ii. An alert message should be displayed in the message center on the screen.

8.5.3. **Test of $O_2$ Alarms**

To ensure the ambient oxygen monitor is generating the proper alarm indications, perform the following:

1. After the oxygen sensor is placed in the area to be monitored, verify the out-of-range alarms are functional by setting the oxygen high and low alarm limits beyond the oxygen readings of the area.

   a. An audible alarm should sound.

   b. An alarm message should be displayed in the message center on the screen.

8.5.4. **Test of Heated Mattress Alarms**

To ensure the Heated Mattress is generating the proper alarm indications, perform the following:

1. Plug in and turn on the Heated Mattress. Disconnect the Heated Mattress cable from the connector in the cable pocket.

   a. An audible alarm should sound.

   b. An alarm message should be displayed in the message center on the screen.

2. Plug in and turn on the Heated Mattress. Using a heat gun, heat the center of the mattress until the Mattress Error alarm activates.

   a. An audible alarm should sound.

   b. An alarm message should be displayed in the message center on the screen.

## 9. DATA STORAGE

9.1. Introduction

The device can store certain data to a removable Data Key.

The following can be recorded to the Data Key:

Power on, Power off, Patient probe T1, Patient probe T2, Set Temperature, Control Mode, Chamber Air Temperature, $SpO_2$ value, PR, $\%O_2$, Phototherapy state (on/ off), heated mattress state, and active alarms.

If the data storage reaches capacity, the oldest data will be overwritten by the incoming data. The data storage will be maintained when the device is powered off or after a total loss of power.

### 9.2. Setup

1. Data Key Receptacle:
   Insert the Data Key (removable digital media) into the data key receptacle located on the rear center console.

### 9.3. General Operation

If the device is storing data to the Data Key, the data storage icon will be displayed on the main screen in the message center.

## 10. PULSEOX (OPTIONAL)

### 10.1. Introduction

The NxtGen Transport Incubator is compatible with Nellcor® or Masimo® $SpO_2$ technologies. The operator should consult the sensor's instructions for use to ensure the appropriate sensor is being used. In addition, only Masimo sensors should be used with the Masimo pulse oximeter and only Nellcor sensors should be used with the Nellcor pulse oximeter.

The pulse oximeter option is intended for prescription use only as a continuous non-invasive monitor of arterial oxygen saturation ($SpO_2$) and pulse rate of pediatric and neonatal patients during both no motion and motion conditions, and for patients who are well or poorly diffused.

This section contains information regarding the optional pulse oximetry feature. The pulse oximeter is to be operated by, or under the supervision of, qualified personnel only. The manual, accessories, directions for use, all precautionary information, and specifications should be read before use. For a complete description of alarms and alerts associated with the PulseOx system, see **Appendix D**.

## 10.2. Pulse Oximetry Theory of Operation

The integrated pulse oximetry option of the Transport Incubator displays functional oxygen saturation based on several key principals.

- The absorption of red and infrared light (spectrophotometry) by oxyhemoglobin and deoxyhemoglobin
- The change in volume of arterial blood in tissue (and hence, light absorption by blood) due to changes in pulse (plethysmography)
- The fluctuating absorbance of venous blood during arteriovenous shunting contributes to noise during the pulse

Because oxyhemoglobin and deoxyhemoglobin differ in light absorption, the amount of red and infrared light absorbed by the blood is related to hemoglobin oxygen saturation. The pulse oximeters supported by the Transport Incubator, Masimo SET® and Nellcor OxiMax, decompose the red and infrared pulsatile absorbance signals into an arterial signal plus a noise component and calculate the ratio of arterial signals. The ratio of the two arterial pulse-added absorbance signals is used to find the oxygen saturation in an empirically derived equation in the pulse oximeter software. Different pulse oximetry sensors can be used with the system. The operator should consult the sensor's instructions for use to ensure the appropriate sensor is being used. In addition, only Masimo sensors should be used with the Masimo pulse oximeter and only Nellcor sensors should be used with the Nellcor pulse oximeter. Sensor accuracy data, found in **Appendix A**, are based on human blood studies in which the values obtained for healthy adult volunteers in induced hypoxia states during motion and non-motion conditions were compared to a laboratory co-oximeter.

Erroneous $SpO_2$ readings may be caused by several reasons including, but not limited to, the following: Interfering substances such as Carboxyhemoglobin and Methemoglobin (i.e. an increase in $SpO_2$ approximately equal to the amount of carboxyhemoglobin present).

- Dyes, or any substance containing dyes, that change usual blood pigmentation
- Severe anemia
- Excessive patient movement
- Venous pulsations
- Placement of a sensor on an extremity with a blood pressure cuff, arterial catheter, or intravascular line
- Use during defibrillation (temporary)

Pulse rate measurement is based on the optical detection of a peripheral flow pulse and therefore may not detect arrhythmias. The pulse oximeter should not be used as a replacement or substitute for ECG-based arrhythmia analysis.

## 10.3. Setup

| Installing the Pulse Oximeter Cable |
|---|
| Locate the $SpO_2$ cable and the $SpO_2$ cable sensor. |
| Remove the $SpO_2$ cable sensor from its packaging and connect it to the end of the cable labeled “Sensor”. |
| Connect the remaining end of the cable to the $SpO_2$ connector in the upper center of the connector panel. |

## 10.4. General Operation

| User Interface - PulseOx | Connector Panel - Pulse Oximetry Connector (Masimo or Nellcor) |
|---|---|
| | 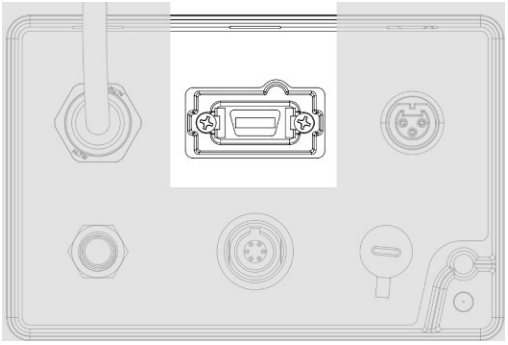 |

| $SpO_2$ Operational States | |
|---|---|
| **Normal Operation**<br>(1) Measured $\%SpO_2$ Value<br>(2) Signal Strength<br>(3) $\%SpO_2$ HI & LOW Alarm Limits<br>(4) Measured Pulse Rate Value (BPM)<br>(5) Dynamic Pulse Rate Indicator<br>(6) Pulse Rate HI & LOW Alarm Limits | 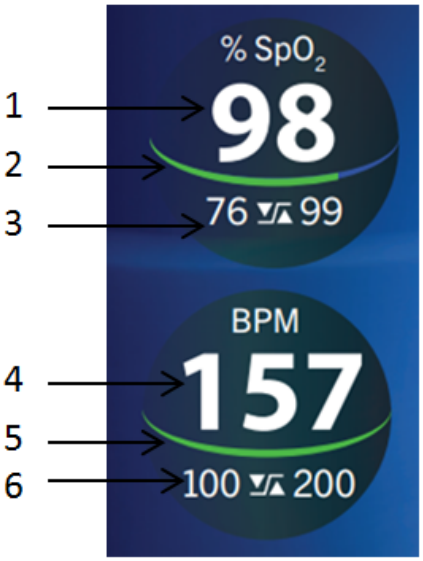  |

| | |
|---|---|
| **Submenus**<br>(7) Submenu Exit (%$SpO_2$)<br>(8) Submenu Cursor<br>(9) Submenu Exit (PR)<br>(10) Submenu Cursor | 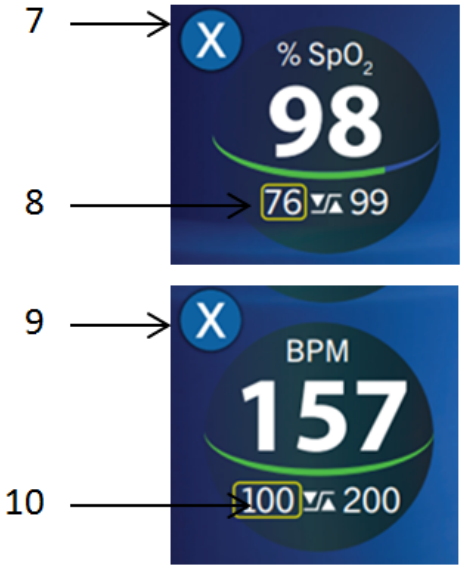 |
| **Operator Disabled**<br>This icon represents the operator disabled state of the $SpO_2$ system. The $SpO_2$ system can be disabled by touch and hold of the %$SpO_2$ or Pulse Rate icon for 2 seconds and the symbol to the right will appear in both locations. To enable the $SpO_2$ system, touch either the %$SpO_2$ or Pulse Rate. | 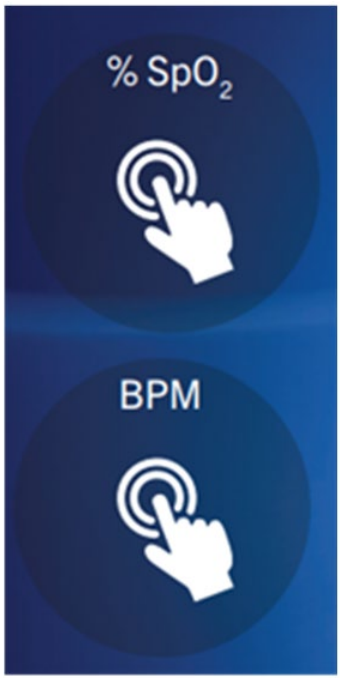 |
| **Cable/Sensor Disconnected**<br>If the $SpO_2$ cable or sensor is unplugged, the $SpO_2$ system will automatically enter the cable/sensor disconnected state and an alert "Connect $SpO_2$ Cable" will be displayed in the message center. Once the $SpO_2$ cable and sensor is connected, the $SpO_2$ system will automatically enter normal operation. Touch and hold of the either the %$SpO_2$ or Pulse Rate icon while in the disconnected state will cause the $SpO_2$ system to transition to the operator disabled state and cancel any active $SpO_2$ alarms. | 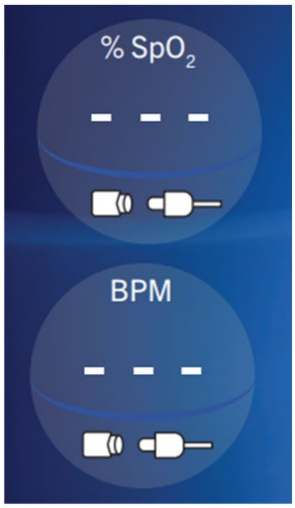 |

| | |
|---|---|
| **Inadequate Signal**<br>If the $SpO_2$ sensor is unable to detect an adequate signal from the patient – the displays will show "---" | |

## 10.5. Setting Alarm Limits - %$SpO_2$

| | |
|---|---|
| Touch or highlight and select the %$SpO_2$ icon. | |
| Select the %$SpO_2$ Low Alarm Limit. | |
| Turn the wheel either counterclockwise to decrease the low alarm limit or clockwise to increase the low alarm limit. Push the wheel to confirm. | |
| Select the %$SpO_2$ High Alarm Limit. | |
| Turn the wheel either counterclockwise to decrease the high alarm limit or clockwise to increase the high alarm limit. Push the wheel to confirm. | |

| | |
|---|---|
| Touch or highlight and select the submenu exit to return to the home screen. | |

## 10.6. Setting Alarm Limits - Pulse Rate

| | |
|---|---|
| Touch or highlight and select the Pulse Rate icon. | |
| Select the Pulse Rate Low Alarm Limit. | |
| Turn the wheel either counterclockwise to decrease the low alarm limit or clockwise to increase the low alarm limit. Push the wheel to confirm. | |
| Select the Pulse Rate High Alarm Limit. | |
| Turn the wheel either counterclockwise to decrease the high alarm limit or clockwise to increase the high alarm limit. Push the wheel to confirm. | |
| Touch or highlight and select the submenu exit to return to the home screen. | |

## 10.7. Signal Strength

The signal strength of the $SpO_2$ sensor is displayed as a dynamic equator on the $SpO_2$ icon.

## 10.8. Perfusion Index (Masimo Only)

If enabled in the administrator menu, the Perfusion Index value represents a ratio between the pulse signal and noise. It helps clinicians determine if the pulse oximetry sensor is placed on an optimal monitoring site. The Perfusion Index value has a range of 0.0-20.0 (i.e. the higher the value, the better the perfusion).

## 10.9. Pulse Rate (BPM)

A visual representation of the pulse rate can be seen on the equator of the BPM icon.

Enabling the BPM Tone in the Admin menu will enable an audible Pulse tone (Masimo only).

10.10. Alarm Delay

The $SpO_2$ averaging time can cause a delay of up to 10 seconds for alarms

10.11. Sensors

Refer to Section 21, ACCESSORIES, for vendor contact information to request sensor technical data.

Multiple sensor geometries are compatible with the integrated pulse oximetry system. Before selecting a sensor, carefully read the sensor's instructions for use. When selecting a sensor, consider the patient's weight, the adequacy of perfusion, the available sensor sites, and duration of monitoring.

Tissue damage can be caused by incorrect application or use of a pulse oximetry sensor, for example, by wrapping the sensor too tightly. Circulation distal to the sensor site should be checked routinely. The site must be inspected and the sensor relocated at the frequency recommended in the sensor's instruction for use. High ambient light sources such as surgical lights (especially those with a xenon light source), bilirubin lamps, fluorescent lights, infrared heating lamps, and direct sunlight can interfere with the performance of a $SpO_2$ sensor. To prevent interference from ambient light, ensure that the sensor is properly applied and that the sensor site is covered with opaque material if necessary. Failure to take this precaution in high ambient light conditions may result in inaccurate measurements.

10.12. Pulse Oximetry Testers / Simulators

To verify the functionality of the pulse oximeter sensors and cables, some commercially available functional testers may be used (refer to the testing device's instructions for use to determine compatibility). The functional testers are designed to interface with the pulse oximeter's expected calibration curves and measure the total error of the pulse oximetry system. However, due to the complex interaction between the pulse oximeter sensor and patient, these testers cannot be used to assess the accuracy of the pulse oximeter sensors. Refer to **Appendix A**, Pulse Oximeter Specifications (Optional Feature), to review sensor accuracy information or contact the pulse oximeter vendor listed in Section 21, ACCESSORIES.

## 11. PHOTOTHERAPY

11.1. Introduction

The phototherapy light utilizes blue light and is intended for the treatment of neonatal hyperbilirubinemia. The physical hardware is a light bar comprised of a lightweight anodized aluminum enclosure with two compression mounting feet. The light bar should always be positioned between the inner and outer Transport Incubator chambers. The light bar has a thin LED diffuser that protects internal electrical components from incidental debris. The intensity of the light will change with distance from the patient. The LEDs emit light in the range of 450-465 nm. This range corresponds to the spectral absorption of light by bilirubin, and is considered to be the most effective for the degradation of bilirubin. Blue LEDs are not a significant source of ultraviolet (UV) or infrared (IR) energy. The phototherapy light system should be set only by appropriately trained personnel and under the direction of qualified medical personnel familiar with currently known risks and benefits of infant phototherapy equipment.

## 11.2. Setup

If equipped, the phototherapy system is integrated into the observation light. See Section 12, OBSERVATION LIGHT, for setup.

### 11.2.1. Check Intensity

Turn on the Phototherapy Light and, using a calibrated meter (such as the ILT Light Meter; International Biomedical part number 736-0001, ILT part number ILT74INTERBI-CE), measure the irradiance intensity in the center of the incubator. Verify that it is 16 $\mu W/cm^2/nm$ or greater (XL Chamber) or 30 $\mu W/cm^2/nm$ (Low Chamber).

If it is not, take the unit out of service and replace the light bar.

### 11.2.2. Prepare the Infant

The infant must lie in the chamber with a majority of skin exposed. Only skin exposed to the phototherapy lights will be therapeutic.

**CAUTION:** Clear objects from the area in the pathway for the light emitted from the phototherapy light. Objects left in the light pathway may become overheated and cause burning.

## 11.3. General Operation

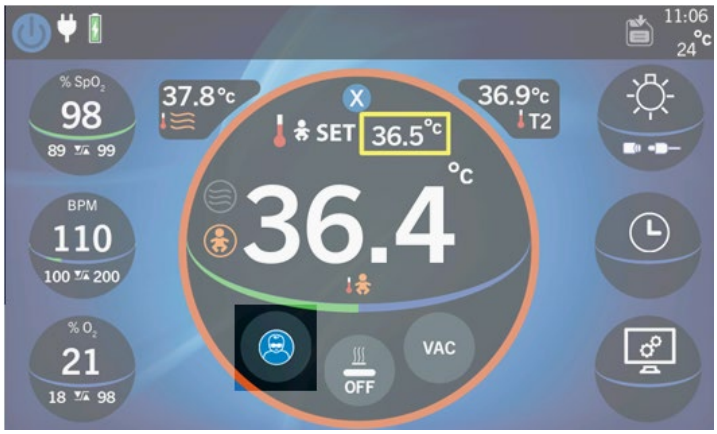


| Phototherapy Operational States | |
|---|---|
| Normal Operation (OFF) (1) | |
| Normal Operation (ON) (2) | 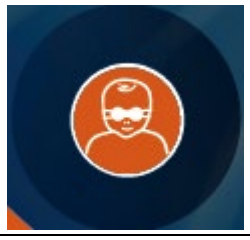 |

| | |
|---|---|
| To initiate phototherapy, enter the heater submenu and select the phototherapy icon with touch or the wheel. | |
| An alert will be displayed in the message center to remind the operator to cover the infant's eyes with eye protection. | |
| To de-activate phototherapy, enter the heater submenu and select the phototherapy icon with touch or the wheel. | |

### 11.3.1. Effective Surface Area

The following graph shows the normalized spectra of the Royal Blue LEDs compared to standard wavelength frequencies.

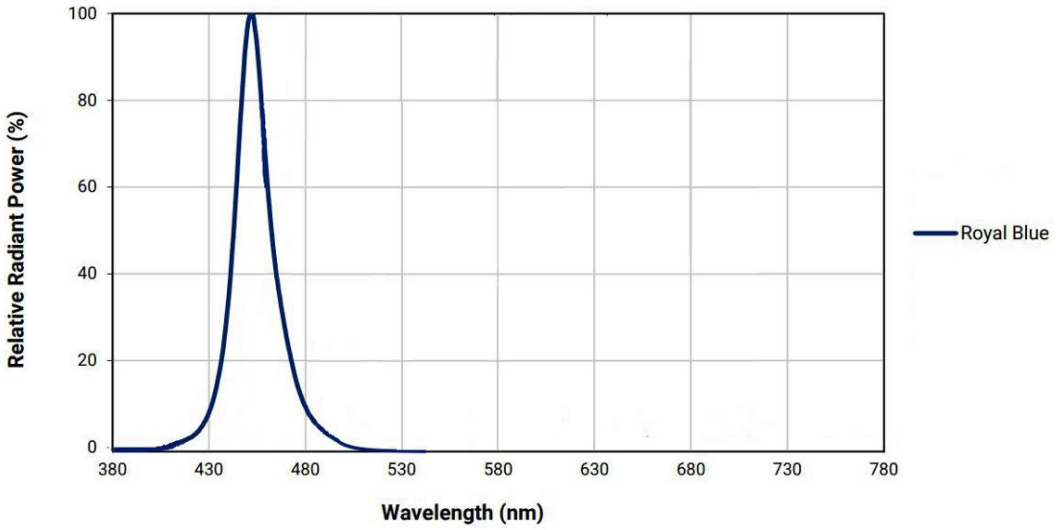


The maximum intensity of the light is 35 μW/cm2/nm and 22 μW/cm2/nm for the low and XL chambers respectively. This measurement is taken at the center of the effective surface area for phototherapy.

| Low Chamber | |
|---|---|
| 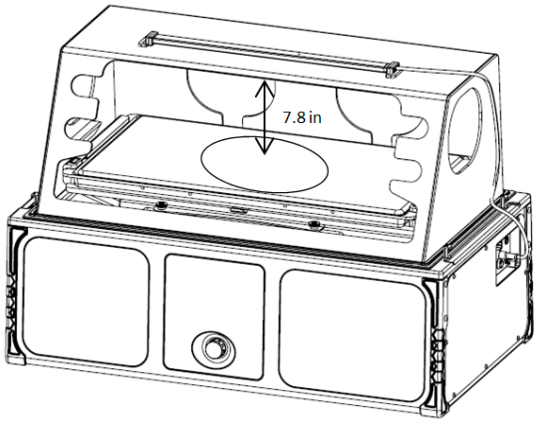  | 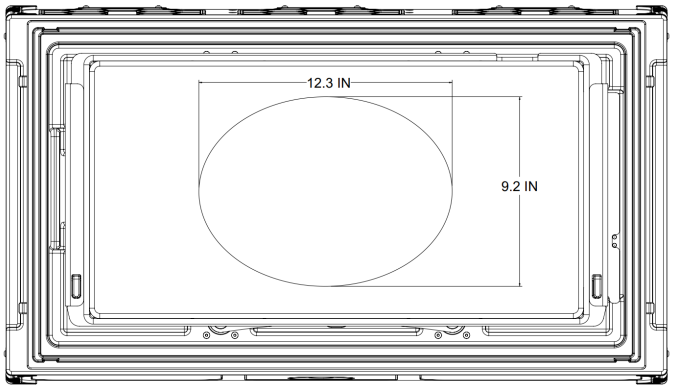  |

| XL Chamber | |
|---|---|
| 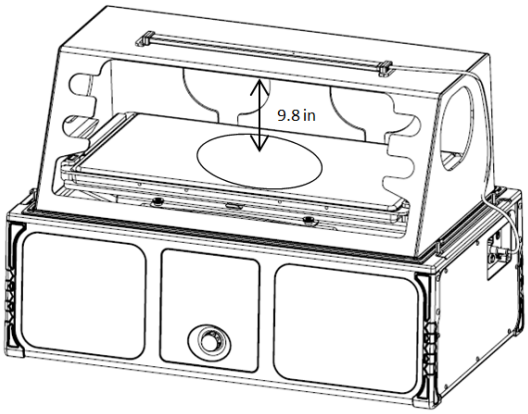  | 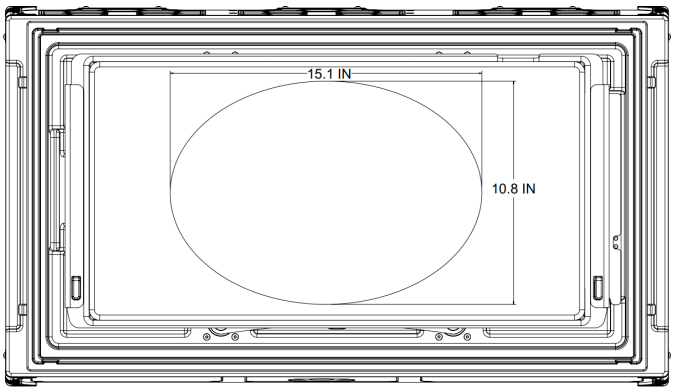  |

### 11.3.2. Phototherapy Light Lifetime Indicator

When the red phototherapy lifetime indicator on the light bar is illuminated, the blue LEDs have exceeded their 39,000 hour limit and it is time to replace the light bar. Nine blue LEDs are used for the Phototherapy. If one or more of these LEDs goes out, the light bar should be replaced.

## 12. OBSERVATION LIGHT

### 12.1. Introduction

The observation light utilizes white light and is intended to be used as auxiliary lighting system that supplements ambient light. The physical hardware is a light bar comprised of a lightweight anodized aluminum enclosure with two compression mounting feet. The light bar should always be positioned between the inner and outer Transport Incubator chambers. The light bar has a thin LED diffuser that protects internal electrical components from incidental debris. The intensity of the light will change with distance from the patient. The white LEDs emit a light in the range of 360 - 830 nm.

### 12.2. Setup

Installing the Observation Light

1. Remove the outer chamber and set aside.
2. Position the light bar on the inner chamber's top surface, in between the two "C-Shaped" locators.
3. Carefully route the cable towards the back right or back left corner of the chamber, depending on the location of the connector bay, and down the side of the inner chamber.

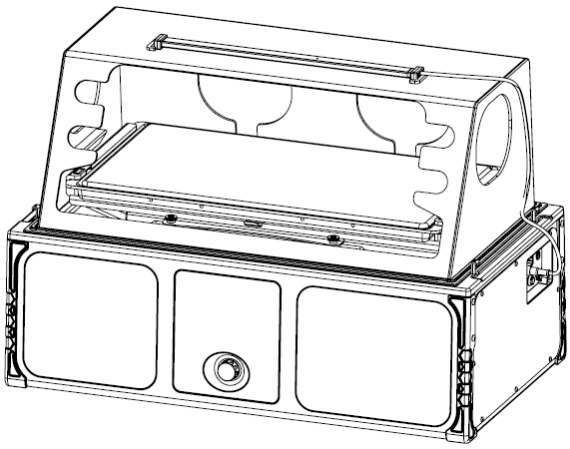

**Figure 12-1 Light Bar Locators**

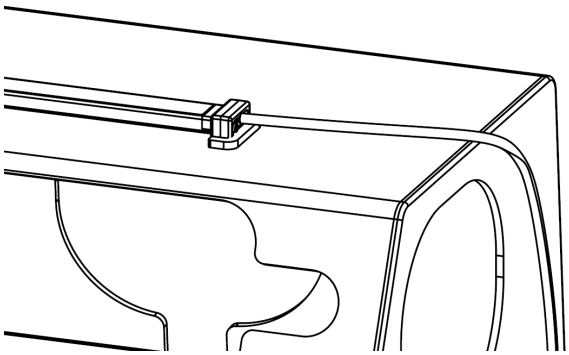

**Figure 12-2 Light Bar Locators**

4. Loosely install the outer chamber and compress the light bar between the two chamber pieces.
5. Ensure the cord passes through the cord recess on the outer chamber.

| | |
|---|---|
| 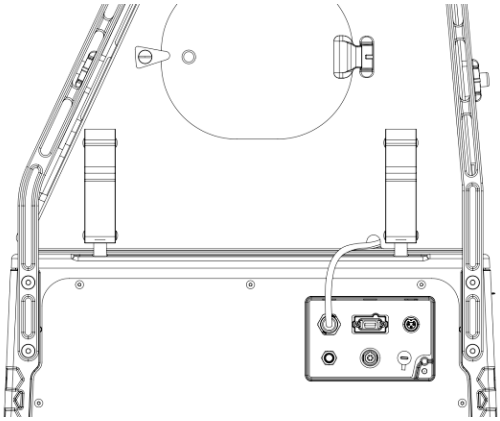 | 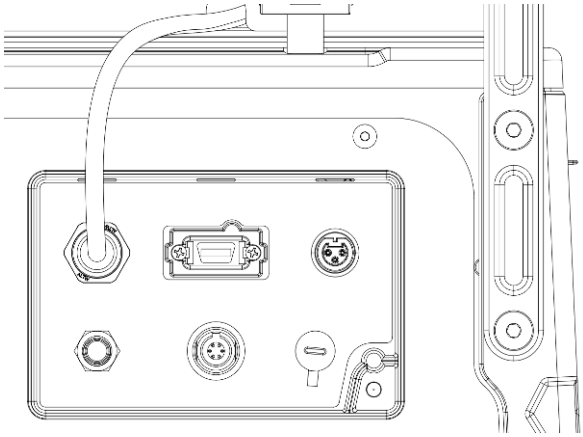 |
| **Figure 12-3** | **Figure 12-4** |

6. Once the light bar and its cord are in the proper location and routed correctly, secure the outer chamber with the chamber latches (4).

12.3. General Operation

The observation light is operated through the user interface and is physically connected at the connector bay. The observation light icon is located in the upper right hand corner of the screen and the connector is located in the upper left hand corner of the connector bay.

| User Interface - Observation Light Icon | Connector Bay - Observation Light Connector |
|---|---|
| | 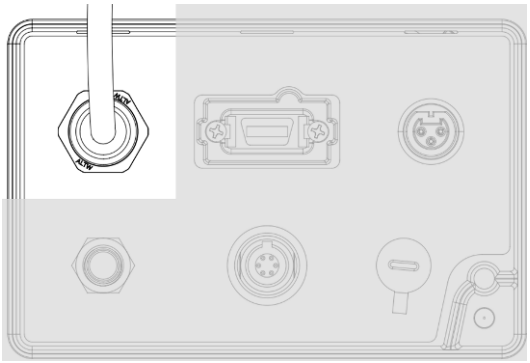 |

The observation light has four states illustrated and described below: Normal Operation - ON, Normal operation - OFF, submenu, and disconnected.

| Observation Light Operational States | |
|---|---|
| **Normal Operation (OFF State)**<br>(1) Observation Light OFF Icon (White)<br>(2) Light Intensity (0%)<br>In the OFF state, the observation light icon is white and there is no intensity indicator in the southern hemisphere. | 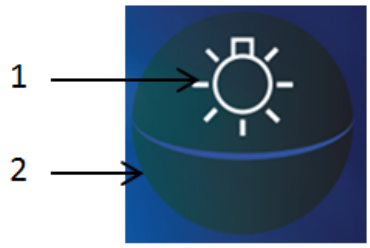 |
| **Normal Operation (ON State)**<br>(3) Observation Light ON Icon (Orange)<br>(4) Light Intensity (100%)<br>In the ON state, the observation light icon is orange and the light intensity is represented in the southern hemisphere by a gradient comprised of 5 discrete light intensity segments. | 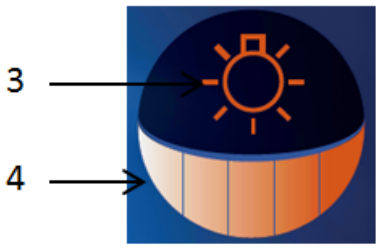 |
| **Light Intensity Submenu**<br>(5) Submenu Exit<br>(6) Light Intensity Selector (0-100%)<br>Once in the submenu, the wheel can be turned clockwise to increase the light intensity or counterclockwise to decrease the light intensity. Selection with the wheel or touching the submenu exit icon will confirm the intensity and return the observation light icon to Normal Operation in the ON state. | 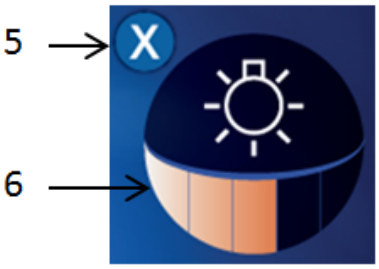 |
| **Observation Light Disconnected**<br>If the observation light cable is disconnected, disconnected state icon will appear. An alert “Light Bar Disconnected” will be displayed in the message center. Once the observation light cable is connected, the observation light will automatically enter normal operation once selected. | |

### 12.3.1. Turning the Observation Light ON

To activate the observation light, touch or select the observation light icon. After the icon is touched or selected and highlights orange, the observation light will always initiate a “soft start”. If this is the initial activation of the observation light from power on, the light intensity will automatically ramp up to 60%. If the light had previously been activated, the light intensity will ramp up to the last known intensity setting. While in the light intensity submenu, the wheel can be turned clockwise to increase the light intensity or it can be turned counterclockwise to decrease the light intensity. The light intensity can be adjusted in increments of 20%. Once the intensity value is set to the desired level, selection with the wheel or touching the submenu exit icon will confirm the intensity and return the observation light icon to Normal Operation - ON state. The intensity setting of the light will be represented in the southern hemisphere of the observation light icon and the icon will change from white to orange.

#### 12.3.2. Turning the Observation Light OFF

Once the observation light is in the ON state, it can be turned off by press and hold of the icon. The icon will highlight orange and the observation lights will turn OFF. The observation light icon reverts to the normal operation - OFF state.

#### 12.3.3. Adjusting the Observation Light Intensity

When the observation light is in the ON state, touching on the icon will return you to the Light Intensity Submenu and allow you to adjust the light intensity.

#### 12.3.4. Observation Light System Interactions with the Optional Phototherapy System

The observation light system may be combined with the optional phototherapy system in one piece of hardware. The control of each lighting system is independent, but their behavior does interact with each other. Refer to the phototherapy section of the manual for instructions specific to the phototherapy system. Below is a summary which depicts how each lighting system will react to the activation of the other lighting system.

- If the observation lights are ON and the phototherapy system is activated, the observation lights will turn OFF.
- If the phototherapy lights are ON and the observation light is activated, the phototherapy lights will turn OFF.
    - If the phototherapy lights were turned off by observation light activation, the phototherapy lights will stay off even when the observation light is turned off.

## 13. AMBIENT OXYGEN MONITOR

### 13.1. Introduction

The ambient oxygen monitor is intended to be used to measure and display the oxygen concentration as a volume fraction percentage (%) in an area to which the oxygen sensor is exposed. The sensor can be placed inside the infant chamber. The readings are proportional to the partial pressure of oxygen ($PO_2$), which is equal to the percentage of oxygen times the absolute pressure of the environment being measured. The ambient oxygen monitor can be influenced by the following:

#### 13.1.1. Temperature

In order for oxygen readings to be accurate, the ambient oxygen monitor must be thermally stable when calibrated and when measurements are taken. If temperature conditions change, adequate time must be allowed for the sensor to stabilize and give accurate readings. For best results, calibrate the ambient oxygen monitor at the same temperature at which the monitor will be used.

### 13.1.2. Pressure

The readings from the ambient oxygen monitor are proportional to the oxygen concentration only if pressure is held constant. The ambient oxygen monitor does not compensate for changes in barometric pressure. Because the flow rate of the gas being sampled can affect the pressure at the sensor in that the back pressure may change, the ambient oxygen monitor should be calibrated at the same pressure as the sample gas. Changes in elevation result in calibration error of approximately 1% of reading per 250 feet. In general, calibration of the instrument should be performed when the geographic elevation at which the product is being used changes by more than 500 feet. The ambient oxygen monitor should not be calibrated at a pressure above 2 atmospheres as this is beyond the sensor's intended use.

### 13.1.3. Humidity

Condensation due to high humidity can adversely affect the ambient oxygen monitor. The sensor should be calibrated and used in environments < 95% relative humidity and placed upstream of any humidifier (if used in a breathing circuit) to reduce the risk of water condensation.

### 13.1.4. Oxygen Sensors

The Maxtec MAX-250E oxygen sensor is similar in operation as a conventional galvanic sensor (lead anode / KOH electrolyte) oxygen sensor. However, the chemistry of the MAX-250E sensor is unique. By implementing a weak acid electrolyte, MAX-250 sensors offer superior performance over the conventional oxygen sensor. The weak acid electrolyte is unaffected by $CO_2$, CO, and $NO_X$. This results in a sensor with a superior technical advantage over KOH-type sensors in applications where these gases are present.

Use only Maxtec Max-250E oxygen sensors and International Biomedical supplied cables with the Transport Incubator. Max-250E oxygen sensors offer quick response, stability, and life greater than 9000 hours.

## 13.2. Setup

| Installing the Ambient Oxygen Monitor Cable |
|---|
| Locate the oxygen sensor cable and the oxygen sensor. |
| Remove the oxygen sensor from its packaging and connect it to the end of the cable labeled "Sensor". |
| Connect the remaining end of the cable labeled "Incubator" to the ambient oxygen monitor connector in the lower right hand corner of the connector panel. |
| Place the oxygen sensor in the location where you would like to monitor the oxygen concentration. |

### 13.2.1. Calibration

For oxygen readings to be accurate, the ambient oxygen monitor must be thermally stable when calibrated and when measurements are taken. Calibration should also be done at the same pressure as when in use due to the fact that the flow rate of sample gas can change the back pressure at the sensing point, changing the oxygen reading. Never calibrate at a pressure above 2 atmospheres as this is beyond the sensor's intended use. The sensor should be calibrated and used in environments < 95% relative humidity and placed upstream of any humidifier to reduce the risk of water condensation which can affect the oxygen sensor.

The following steps describe and illustrate the calibration process of the oxygen sensor:

| Oxygen Sensor Calibration Process | |
|---|---|
| Touch or select the ambient oxygen monitor icon on the user interface to enter the submenu. | 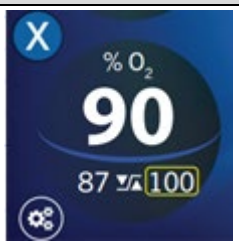 |
| Utilize the wheel to highlight the calibration icon with the submenu cursor. | |
| Select the calibration icon by pushing in the wheel. The icon will turn orange along with the active measurement value. | |
| Expose the oxygen sensor to oxygen gas at a known concentration for several minutes to ensure the reading has stabilized. Once the reading is stable, use the control wheel to increase or decrease the orange, active $\%O_2$ value to match the $\%O_2$ of the calibration gas. | 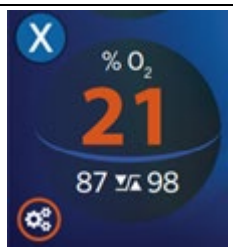 |
| Once the desired value is achieved, push in the control wheel or touch the calibration icon to save and exit the calibration process and return to the submenu. | |

## 13.3. General Operation

The ambient oxygen monitor is operated through the user interface and is physically connected at the connector panel. The ambient oxygen monitor icon is located in the lower left hand corner of the screen and the connector is located in the lower right hand corner of the connector bay.

| User Interface - Ambient Oxygen Monitor Icon | Connector Panel - Ambient Oxygen Monitor Connector |
|---|---|
| | 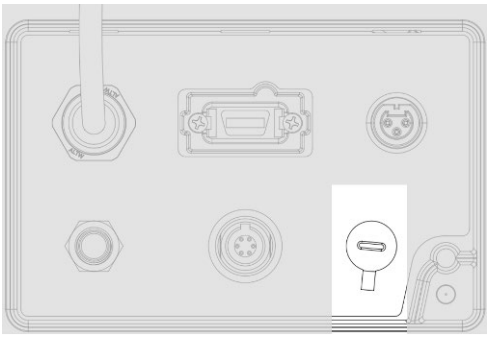 |

The ambient oxygen monitor has four states illustrated and described below: normal operation, submenu, operator disabled, and disconnected.

| Ambient Oxygen Monitor Operational States | |
|---|---|
| **Normal Operation**<br>(1) Measured Value (%$O_2$)<br>(2) HI & LOW Alarm Limits | 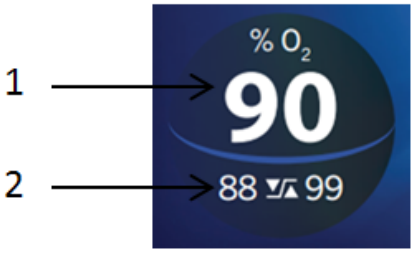  |
| **Submenu**<br>(3) Submenu Exit<br>(4) Submenu Cursor<br>(5) Calibration Mode Icon | 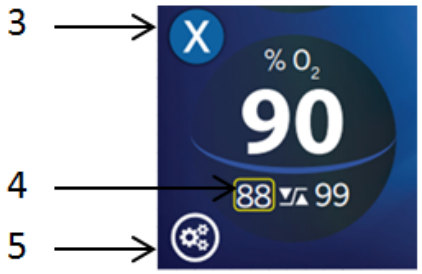  |
| **Operator Disabled**<br>This icon represents the operator disabled state of the ambient oxygen monitor. The ambient oxygen monitor can be disabled by touch and hold of the ambient oxygen monitor icon for 2 seconds and the symbol to the right will appear. To enable the ambient oxygen monitor, touch the ambient oxygen monitor icon. | |

| | |
|---|---|
| **Cable/Sensor Disconnected**<br>If the ambient oxygen monitor cable or sensor is unplugged, the ambient oxygen monitor will automatically enter the cable/sensor disconnected state and an alert “Connect $O_2$ Cable” will be displayed in the message center. Once the oxygen cable and sensor is connected, the ambient oxygen monitor will automatically enter normal operation. Touch and hold of the ambient oxygen monitor icon while in the disconnected state will cause the ambient oxygen monitor to transition to the operator disabled state and cancel any active ambient oxygen monitor alarms. | 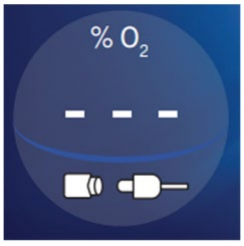 |

## 14. HEATED MATTRESS

### 14.1. Introduction

The heated mattress is to be used in combination with the heater of the Transport Incubator. In addition to warming, the mattress also provides pressure relief using an integral foam pad under the flexible heating surface. The foam pad is composed of smolder-resistant polyurethane and is encased in a flame-resistant cast-coated polyurethane polyester heated mattress cover. The fabric is designed for applications where a flexible cover fabric can help reduce interface pressure and anti-microbial performance is desired for the benefit of infection control

**CAUTION:** Polyurethane foams are combustible. Do not expose to flame or other ignition source.

**CAUTION:** Do not use the heated mattress without the heated mattress cover in place.

### 14.2. Setup

Installing the Heated Mattress

1. Place heated mattress in the chamber on the mattress tray.
2. Thread the heated mattress cable through the grommet closest to the connector panel.

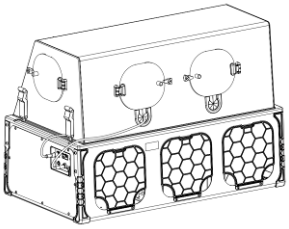

**Figure 14-1 Heated Mattress Cable**

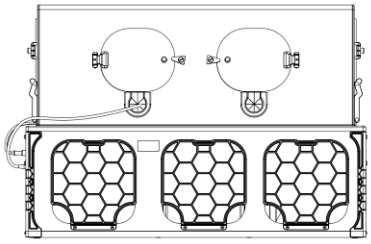

**Figure 14-2 Heated Mattress Cable**

3. Connect the heated mattress cable to the bottom center connector as depicted below.

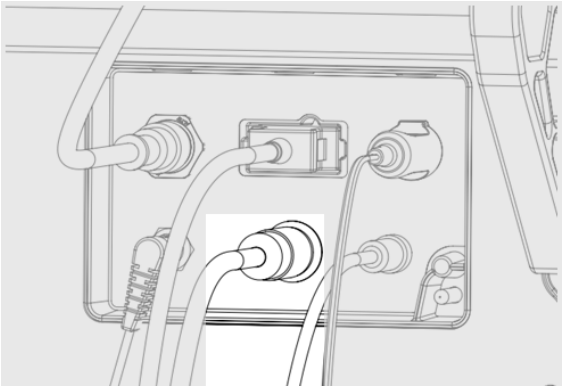

**Figure 14-3**

14.3. General Operation

The heated mattress is operated through the user interface and is physically connected at the connector bay. The heated mattress icon is located in the lower center of the screen and the connector is located in the lower center of the connector bay.

| User Interface - Heated Mattress Icon |
|---|
| 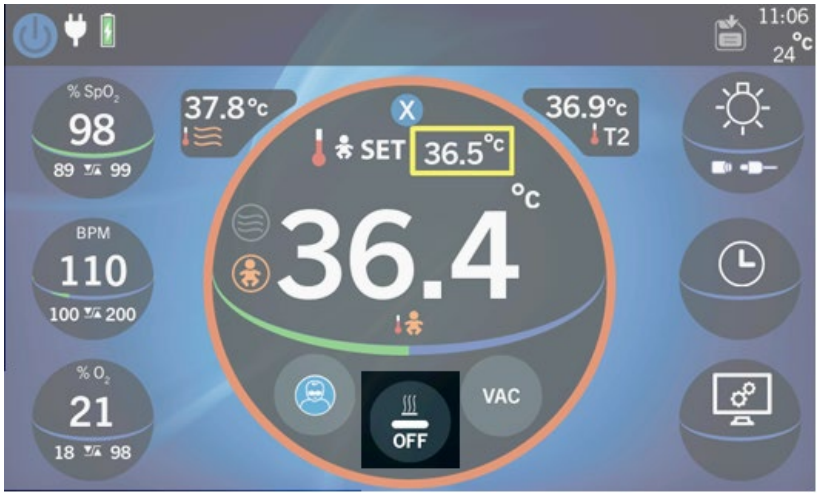 |



| Heated Mattress Operational States | |
|---|---|
| **Normal Operation (OFF)**<br>(1) | |
| **Normal Operation (ON)**<br>(2) | |

| | |
|---|---|
| To turn on the heated mattress, enter the heater submenu and select the heated mattress icon with touch or the wheel. | |
| To turn off the heated mattress, enter the heater submenu and select the heated mattress icon with touch or the wheel. | |

## 15. SUCTION

### 15.1. Introduction

The Transport Incubator is provided with an integrated low-flow, low vacuum suction device. This hardware is accessible through the rear door.

### 15.2. Setup

If the suction unit option was purchased, the suction device will already be installed in the Transport Incubator.

| | |
|---|---|
| The Suction Canister is 800 mL maximum volume with an integral float valve to prevent overflow. When the float valve is activated, flow will cease until suction and excess liquid are removed. Turn off suction device and follow procedure to empty contents and replace Suction Canister. A clamp bracket is provided for mounting of the Suction Canister in a desired location. | 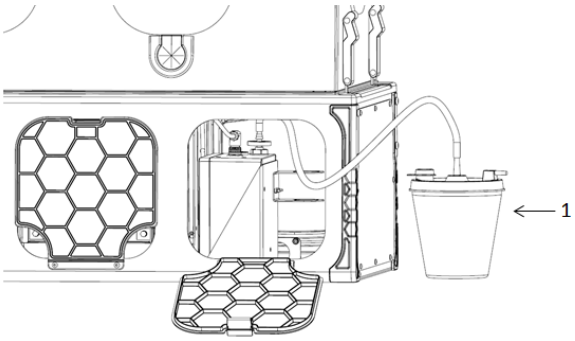 |

| | |
|---|---|
| Connect the short connection tube from the Suction module to the Suction Canister. | 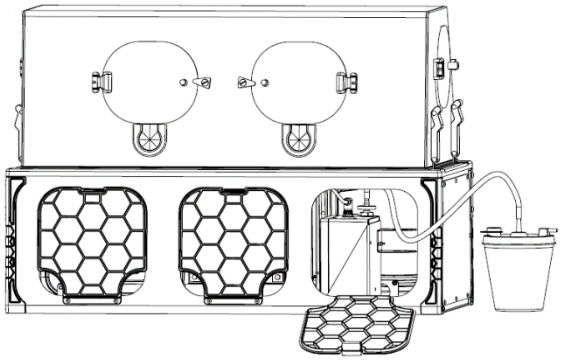 |
| Prior to use, connect an ISO 8836 compliant suction catheter (not supplied) to the Suction Canister. Occlude tubing and check the maximum suction pressure. If necessary, adjust the suction pressure on the User Interface to the desired pressure. | 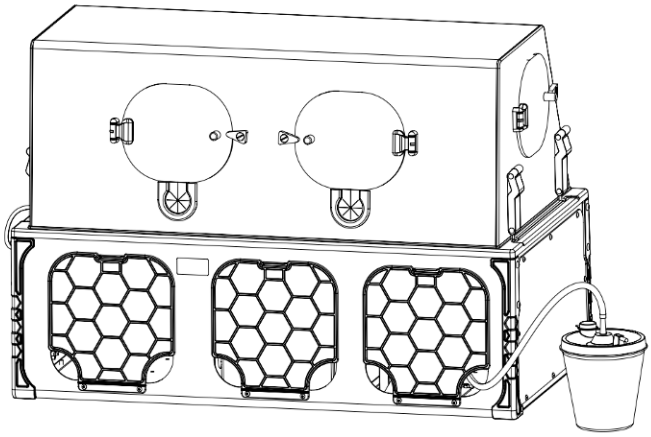 |

## 15.3. General Operation

| Suction Operational States | |
|---|---|
| **Normal Operation (OFF)** | |
| **Normal Operation (ON)**<br>(1) Measured Negative Pressure Value<br>(2) Unit of Measure - Millimeters of Mercury | |

| | |
|---|---|
| Enter the heater submenu and select the suction icon with touch or the wheel. | |
| Use the wheel to adjust the suction pressure (occlude the tubing to display suction pressure). | |
| The displayed pressure value will change colors depending on value.<br>0 - 59 mmHg - WHITE<br>60 - 100 mmHg - GREEN<br>>101 - RED | |
| To turn off the suction device, enter the heater submenu and press and hold the suction icon. | |

| | |
|---|---|
| While the suction is ON, to reenter the icon and adjust the suction pressure, tap the icon. | |

## 16. TIMERS

### 16.1. Introduction

The Timers menu is a standard feature of the Transport Incubator. The menu allows the operator to either set a countdown timer or initiate a stop watch timer. The timers menu is for reference only and does not control or correlate to any another function of the Transport Incubator.

### 16.2. General Operation

| Timers Operational States | |
|---|---|
| **Normal Operation - Timer Active**<br>(1) Time value is displayed (countdown or stopwatch) | |
| **Submenu**<br>(3) Submenu Exit<br>(4) Stop Watch Icon<br>(5) Countdown Timer Icon | 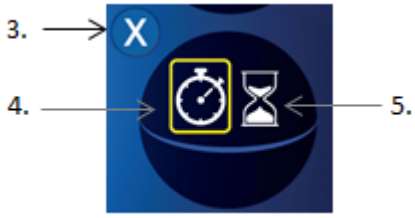 |
| **Submenu - Stop Watch**<br>(6) Submenu Exit<br>(7) Play Icon<br>(8) Reset Icon (Inactive) | |
| **Submenu - Countdown Timer**<br>(13) Submenu Exit<br>(14) Countdown Timer "Set" Value<br>(15) Play Icon<br>(16) Reset Icon (Inactive) | |

| Start, Pause & Reset Stop Watch | |
|---|---|
| Select the Stop Watch Icon | 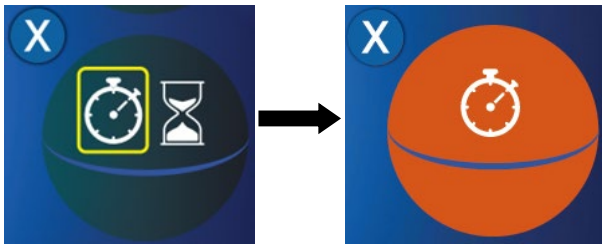 |
| Use the Play, Pause, and Reset icons to control the stopwatch action. | 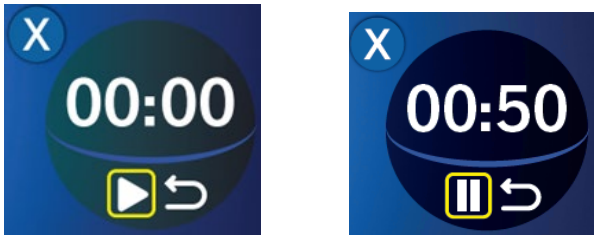 |

| Set & Play Countdown Timer | |
|---|---|
| Select the Countdown Timer Icon | 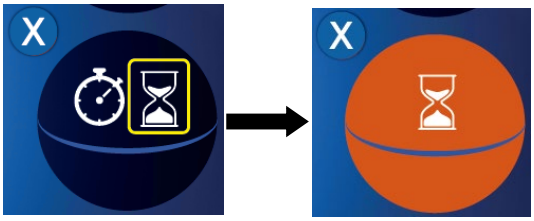 |
| Select the countdown timer value and turn the wheel clockwise to the desired time. Select the value again to confirm. | 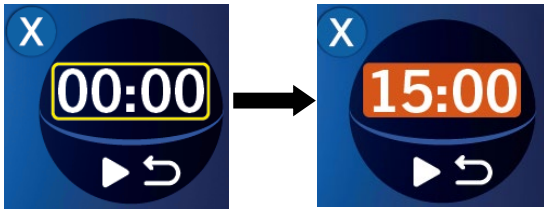  |
| Utilize the Play, Pause, and Reset icons to control the Countdown timer. | |

## 17. DEVICE SETTINGS

### 17.1. Introduction

The device settings menu is a standard feature of the Transport Incubator. The menu allows the operator to adjust the screen brightness, adjust the alarm volume, or lock the screen.

### 17.2. General Operation

| Locking Screen | |
|---|---|
| Select screen settings icon with touch or wheel. | |
| Select the lock icon with wheel.<br><br>***NOTE:*** *The screen lock icon will be gray, and will not be selectable while there are any active alarms/alerts.* | |
| The screen will no longer accept commands from the touch screen. The message center can still be touched. | |
| To unlock the screen, press the wheel or touch the lock icon. | |

| Adjust Screen Brightness | |
|---|---|
| Select the screen settings icon with touch or with the wheel. | |
| Select the brightness icon. | |
| Adjust screen brightness with the wheel. | |
| Select the screen settings icon with touch or with the wheel. | |

| Adjust Alarm Volume | |
|---|---|
| Select the alarm volume icon. | |
| Adjust alarm volume with the wheel. The alarm volume range is from the administrator minimum to 100%. (See Section 5.) | |

## 18. CLEANING

### 18.1. Introduction

Use a soft clean cloth and a disinfectant solution for cleaning and disinfection. After each infant use, follow the hospital's infection control procedures for equipment disinfection. Wipe down the surfaces of the device with a soft cloth dampened with a recommended disinfectant solution. Always follow the cleaning solution-manufacturer's direction for use. Dry all surfaces with a soft cloth to remove any cleaner residue.

Ensure you follow your hospital infection control procedures, as well as all local, state, and federal regulations.

**Table 18-1 Recommended Disinfectant Solutions**

| Cleaning Agent | Active Ingredients |
|---|---|
| Soap/Water (Various) | Phenols<br>Phospholipid surfactant |
| Cavicide or Cavi Wipes | Diisobutylphenoxyethoxethyl dimethyl<br>Isopropyl alcohol 17.2%<br>Inert ingredients 82.5% |
| Isopropyl Alcohol | Up to 100% Isopropyl Alcohol |
| Ethanol | Up to 100% Ethanol |
| Bacillol 30 or Bacillol Wipes (For CE countries only) | Ethanol<br>Propan-2-ol<br>Propan-1-ol |

| | |
|---|---|
| | n-alkyl-aminopropyl-glycine |

18.2. Inspection

After cleaning and disinfection, always inspect the cleaned area for thoroughness. If the device doesn't appear adequately clean, repeat the cleaning process.

| Disassembling the Incubator | |
|---|---|
| 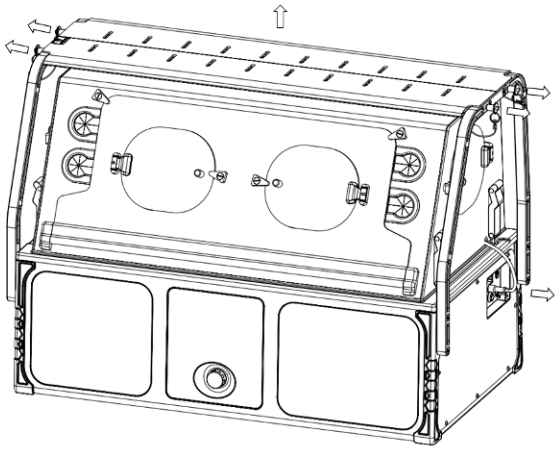 | 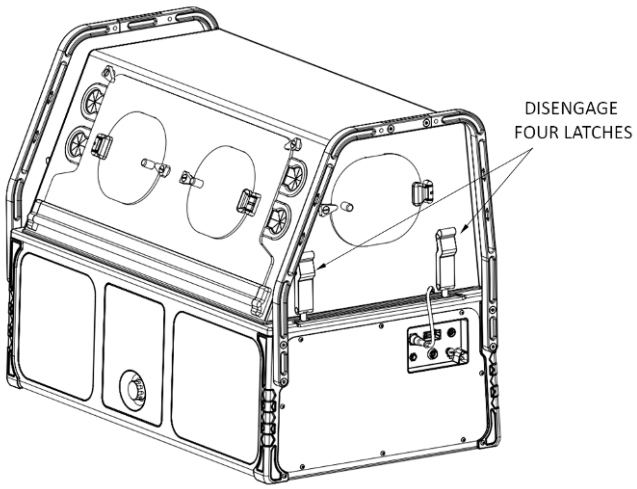 |
| 1. Remove all external cables and, if applicable, pull pins (4) to remove shelf. | 2. Disengage chamber latches (4) and disconnect the light bar. |
| 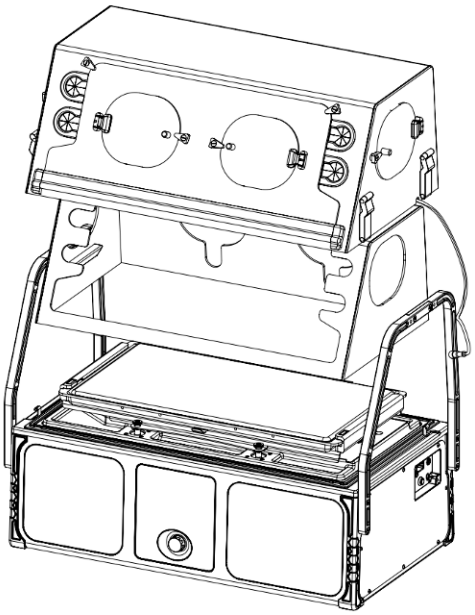 | 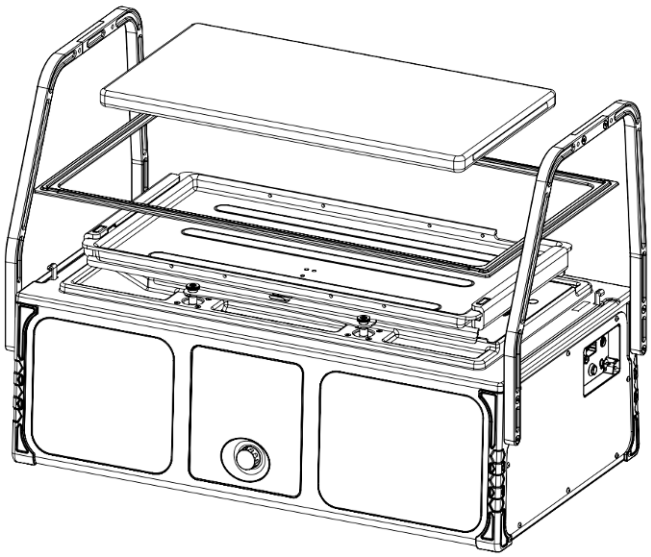 |
| 3. Carefully remove the infant chamber and separate each piece (inner & outer) on a stable surface. | 4. Remove infant mattress and chamber gasket. |

| | |
|---|---|
| 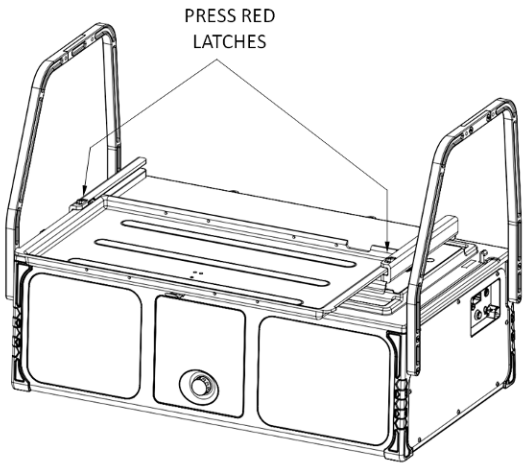 | 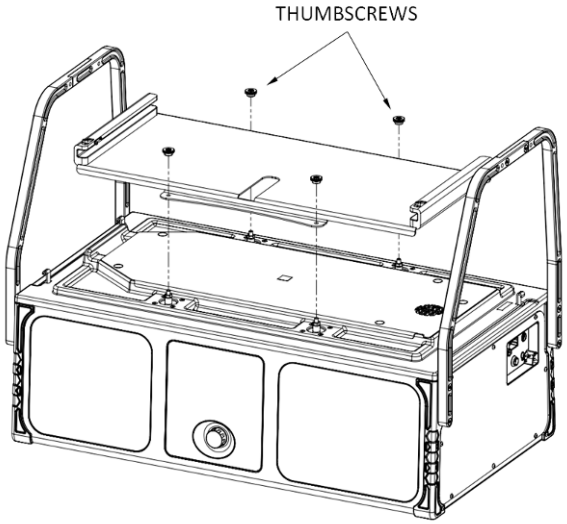 |
| 5. Slide out the patient tray and depress red latches (2) to release and remove the tray. | 6. Unscrew thumb screws (4) and remove the patient support tray. |
| 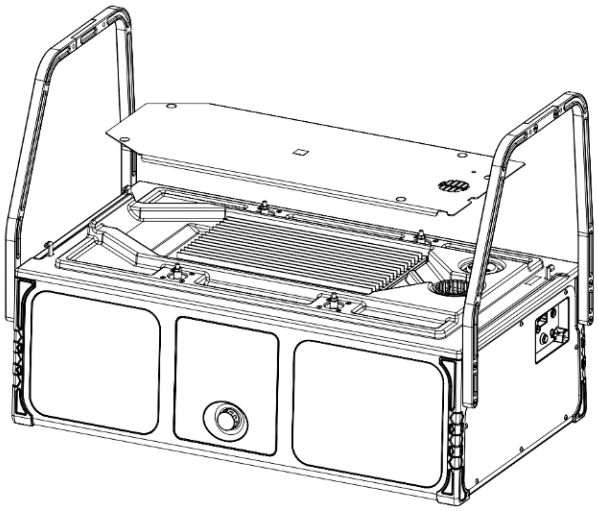 | 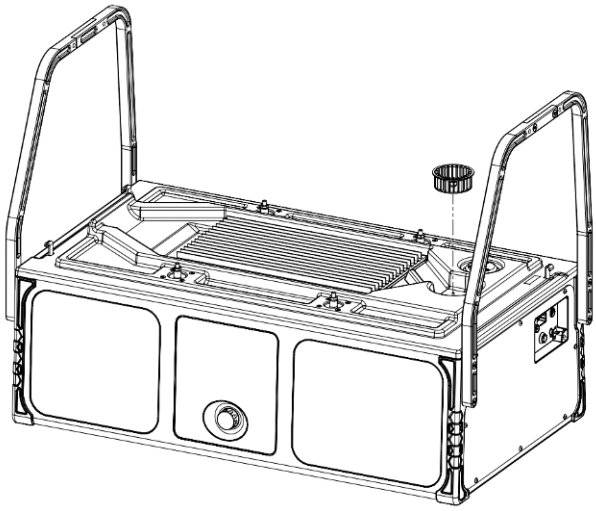 |
| 7. Remove airflow cover plate. | 8. Remove airflow impeller. |
| 9. Once disassembled, thoroughly clean all surfaces with approved cleaning solutions specified above. After the use of cleaning solutions, wipe down all surfaces with a damp cloth. | 10. Once all of the components are clean and dry, reverse the steps to reassemble the airflow tray and chamber. Check each component for damage and ensure the impeller spins freely after installation. |

18.3. Cleaning of Oxygen Sensor (Optional Equipment)

When cleaning or disinfecting the oxygen sensor, take appropriate care to prevent any solution from entering the sensor end or the connector end. The oxygen sensor may be cleaned using a mild detergent and moist cloth and disinfected using standard topical disinfectants.

18.4. Cleaning of Cables (Optional Equipment)

Wipe the oxygen sensor cable and the pulse oximeter patient cable lightly with a soft dry cloth between uses.

18.5. Cleaning of Patient Temperature Probes

Wipe the reusable skin temperature probe lightly with a soft dry cloth between uses. Wipe and disinfect the heat-sensing portion with a soft cloth dampened with a recommended disinfectant solution.

After disinfection, wipe the skin temp probe with a clean damp cloth to remove residual disinfectant.

18.6. Cleaning of Pulse Ox Sensor (Optional Equipment)

The provided sensors are disposable and should only be reused on the same patient if the adhesive still adheres to the skin and the detector window is clear. Otherwise, properly dispose of the sensor. For reusable sensors, see the manufacturer's cleaning instructions.

18.7. Cleaning of Mattress/Heated Mattress

Visually inspect the inside of the mattress for contamination and discontinue use if internal contamination is found. If the cover is torn or damaged, discontinue use and contact your International Biomedical representative.

Use a soft clean cloth and a disinfectant solution for cleaning and disinfection. After each infant use, follow the hospital's infection control procedures for equipment disinfection. Wipe down the surfaces of the device with a soft cloth dampened with a recommended disinfectant solution. Always follow the cleaning solution-manufacturer's direction for use. Dry all surfaces with a soft cloth to remove any cleaner residue.

18.8. Cleaning of Suction

After each use, clean and disinfect the suction device as required. Replace the single use Suction Canister. Replace vacuum tubing between the Suction Canister and patient.

## 19. PREVENTATIVE MAINTENANCE

19.1. Introduction

To ensure proper operation, standby readiness, and malfunction reporting, International Biomedical recommends following a preventative maintenance program. The daily preventative maintenance procedures can be performed by a knowledgeable clinician. Maintenance procedures (detailed in the Service Manual) should be performed by an appropriately trained biomedical maintenance technician. No other preventative maintenance is required.

19.2. Pre-Use Checkout

The following Checkout should be performed prior to each use by knowledgeable operator or service personnel.

19.2.1. **Operational Check**

1. Check the AC power cord and ensure that there are no cuts or severe bends in the cord, that all prongs on the plug are in good condition, and that the cord is securely fastened in place. Replace the cord as needed.

2. With the Transport Incubator connected to AC power, press the wheel (**Figure 3-1**, item 2) to turn the Transport Incubator on. The Transport Incubator will perform a Power On Self-Test and test the audible alarm. Ensure the Power On Self-Test progress bar is displayed, and that the audible alarm can be heard. Verify the AC power icon and battery power icon is displayed in the upper left hand corner after completion of the test.

3. Ensure the Power On Self-Test Results, under the message center, shows PASSED.
4. Place a hand inside the left side of the infant chamber and verify air flow. The fan should be able to be heard at the right side of the Transport Incubator.
5. Disconnect the AC power connection from the Transport Incubator and observe that the battery icon and battery percentage is displayed in the upper left hand corner. Verify the battery is adequately charged for the transport.
6. Confirm that the Main screen displays the infant chamber air temperature.
7. If external DC power is to be used, check the DC power cord and ensure that it has no cuts or severe bends and that the connectors have not been damaged.
8. Turn on the suction device (if applicable) and ensure it operates. Turn off the suction device.
9. Inspect the mattress and positioning straps for damage. Repair or replace as needed.

19.2.2. **Infant Chamber Check**

1. Ensure that the infant chamber is free from cracks.
2. Ensure that the gasket between the chambers and airflow tray is in place. Check that the grommets in the tubing through-holes on the infant chamber are also in place.
3. Ensure that the infant chamber is secured to the Transport Incubator with the two latches on both ends of the infant chamber.
4. Ensure that the infant chamber is clean and ready for transport.

19.2.3. **Mattress Tray Check**

1. Ensure that the impeller spins freely without dragging.
2. The magnetic heatsink cover is present and undamaged.
3. Four bolts that hold down heatsink and airflow tray are present.
4. No old humidity sponges are left hidden under magnetic cover.
5. All four mattress tray knobs are present and hand-tight.
6. Mattress tray front center release lever retains the mattress tray.
7. Two mattress tray ejection levers prevent complete removal of tray without user action.

19.2.4. **Light Bar**

1. Turn the Incubator ON and then turn on the observation light. By looking at a reflection of the LEDs, verify that all six white LEDs are illuminated. If they are not, check that the intensity level is high enough to adequately view the patient.
2. Turn ON the Phototherapy. By looking at the reflection of the LEDs, verify that all nine blue LEDs are illuminated. If they are not, have the light bar checked by a qualified biomedical technician.

3. Inspect the power cable for wear or damage and replace if necessary. Verify that the cable is routed appropriately and not pinched at any point.

19.2.5. **Accessories**

1. Test operation of other accessories as indicated by manufacturer's recommendations.

19.2.6. **Sensors and Cables**

1. Inspect the oxygen sensor and the pulse oximeter sensor for damage. Replace, if necessary.
2. Inspect the temperature probe cables, heated mattress cable, oxygen sensor cable, and pulse oximeter cable for wear or damage. Replace, if necessary.

19.3. Annual Maintenance

Annual maintenance should be performed by a biomedical maintenance person, or trained designee. Refer to the Service Manual for suggested annual maintenance procedures.

19.4. Battery Maintenance

If the Transport Incubator is not to be used for an extended period of time, or during storage or transport, disconnect and remove the battery. After use or complete discharge, immediately recharge the battery. If not regularly used or maintained on charge, the battery should be recharged on a monthly basis to prevent battery degradation. The life of the battery is dependent on the number and depth of discharge cycles. At the end of the battery's life, it must be recycled or disposed of properly. Accessory equipment may also contain batteries which must be properly cared for. Consult the accessory equipment operator's manuals for instructions.

19.4.1. **Battery Removal**

This section details the procedure to be followed to remove and replace the battery. Due to the weight of the battery and limited working area, exercise caution when inserting / removing battery to avoid damage to cables.

1. Ensure incubator is powered off.
2. Ensure all external power has been removed.
3. Open center rear compartment.
4. Loosen the two bolts securing the upper battery bracket and remove.
5. Open rear left and rear right compartment doors. Locate and loosen the two screws holding the lower battery bracket and remove or slide out of the way.
6 Remove the negative lead from the battery terminal. If necessary, the battery may be carefully lifted or tilted to allow better access to the terminal.
7. Remove the positive lead from the battery terminal. If necessary, the battery may be carefully lifted or tilted to allow better access to the terminal.
8. The battery can now be carefully removed.

### 19.5. Calibration Schedule

| Feature | Calibration Frequency |
|---|---|
| Fuel Gauge (Battery capacity) | Annually (or if Fuel Gauge accuracy is in question) |
| Heater | Annually (or if Chamber temperature accuracy is in question) |
| Oxygen | Weekly - single point calibration |
| Phototherapy Light | Monthly - Irradiance Verification |
| Suction | Annual functional check |

## 20. TROUBLESHOOTING

The following list describes the most common issues that arise through use of the Transport Incubator and the suggested corrective actions. If further assistance is needed, refer to the Service Manual or contact International Biomedical.

### 20.1. General

| Trouble | Action to Take |
|---|---|
| Why will the Transport Incubator not turn on? | The battery could be completely depleted. Connect device to external AC or DC and try again. |
| Why does the focus not appear where I touched? | If the focus has disappeared, it will reappear at its last location when the screen has been touched. |
| Why do the phototherapy, heated mattress, and suction not turn on when touched? | The thermal menu must be opened before the phototherapy, heated mattress, and suction icons can be accessed. |
| I can hear the suction pump, why is there no suction? | a) Check lines are properly connected.<br>b) Inspect float valve on Suction Canister.<br>c) Filter may be clogged. |
| Why does the incubator fan make excessive noise? | Fan is improperly installed and rubbing on airflow tray or magnetic cover. Reinstall fan impeller. |

## 20.2. Power On Self-Test

| Error Reported | Action to Take |
|---|---|
| Accelerometer | Reset the Transport Incubator. |
| Ambient | Reset the Transport Incubator. |
| Battery | Perform Fuel Gauge calibration in the service menu. |
| Battery Depleted | Recharge Battery |
| Battery Under Volt | Check Battery Fuse and Battery Voltage, Recharge Battery with External Charger if under 9V |
| Buzzer | Reset the Transport Incubator. |
| Clock | Set the device's clock in the administrator or service menu. |
| Control Com | Reset the Transport Incubator. |
| Fan | Reset the Transport Incubator. |
| GPIO | Reset the Transport Incubator. |
| Heater | Reset the Transport Incubator. |
| Heater Com | Reset the Transport Incubator. Check Heater Fuse if needed. |
| Light Bar | Ensure the light bar cable is connected or disable Phototherapy in the administrator menu. |
| Mattress | Ensure the heated mattress is connected or disable the heated mattress in the administrator menu. |
| $O_2$ | Ensure the $O_2$ cable is connected or disable $O_2$ in the administrator menu. |
| Patient | Replace the T1 patient probe. |
| Power | Reset the Transport Incubator. |
| Pressure | Reset the Transport Incubator. |
| RAM | Reset the Transport Incubator. |
| Reboot Required | Reset the Transport Incubator. |
| ROM | Reset the Transport Incubator. |
| SD Card | Reset the Transport Incubator. |
| Speaker | Reset the Transport Incubator. |
| $SpO_2$ | Ensure the $SpO_2$ cable is connected or disable $SpO_2$ in the administrator menu. |
| Suction | Ensure the suction module is connected or disable suction in the administrator menu. |
| Touch Screen | Reset the Transport Incubator. |
| USB | Reset the Transport Incubator. |
| Wheel | Reset the Transport Incubator. |

### 20.2.1. Power on Self-Test Images

| Error Reported | Example |
|---|---|

| | |
|---|---|
| Heater | 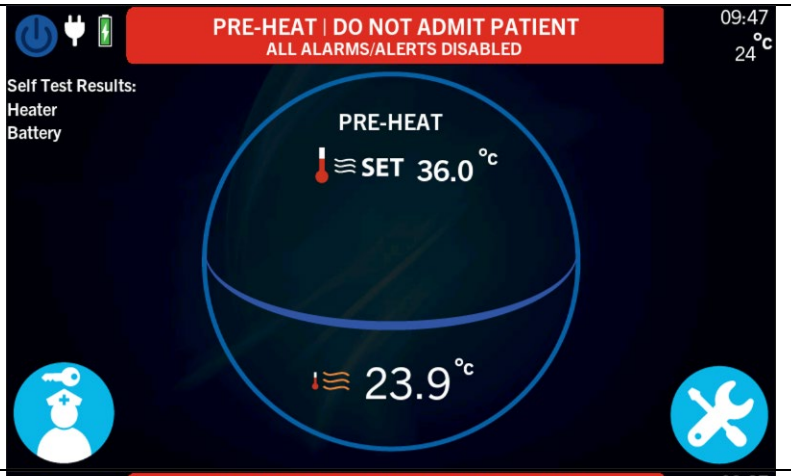 |
| Fan | 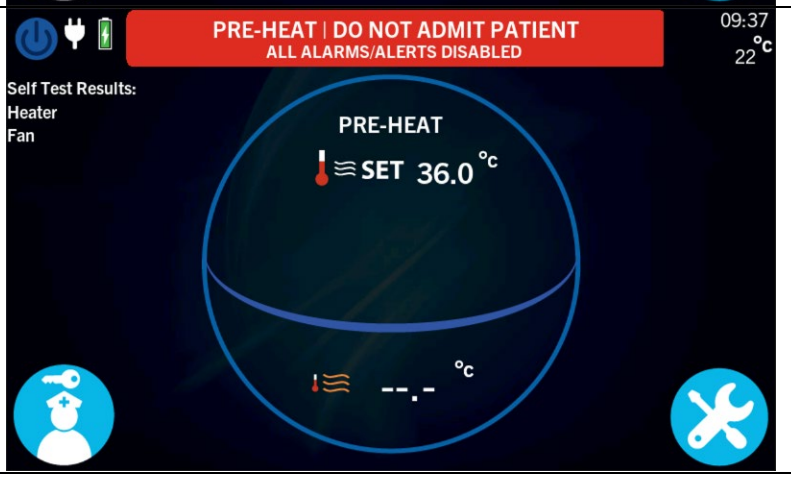 |

## 21. ACCESSORIES

The following International Biomedical accessories are available for use with the NxtGen Transport Incubator.

| Name |
|---|
| $SpO_2$ Cable (Masimo & Nellcor) |
| Light Meter |
| Patient Temperature Adapter Cable |
| Patient Temperature Probe - Reusable |
| Phototherapy Light |
| Observation Lights |
| Developmental Mattress |
| Heated Mattress |
| Humidity Sponges |
| Suction Disposables |

Contact your provider or International Biomedical representative for the latest accessories list for the NxtGen Transport Incubator.

## 22. REPAIR POLICY

Warranty repair and service should be performed by a qualified International Biomedical Representative. Contact a qualified representative by calling technical support at 1-512-873-0033.

Do not use malfunctioning equipment, including equipment that does not pass the check-out procedure. Refer to the service manual for a list of service parts and for instructions on how to service and calibrate the unit. After service, follow the check-out procedures prior to returning the device to service.

## 23. WARRANTY

Unless otherwise specified, International Biomedical warrants all products of its manufacture at the time of shipment to be free from defects of material and workmanship for a period of twelve months from the date of shipment when owned by the original purchaser. Any product which is believed to be defective, if returned within twelve months after date of shipment by the Company with freight prepaid and found by the Company's inspection to be defective within the terms of this warranty, will be repaired or replaced free of charge and shipped, freight prepaid, to any point in the United States. If inspection by the Company of any such product does not disclose any defect within the terms of this warranty, the Company's regular charges for repairs or replacement and freight shall apply. All consumable and disposable products are guaranteed to be free from defects upon shipment only. The warranty period for batteries is limited to 90 days from date of shipment. This warranty specifically excludes and replaces all other express and implied warranties. The Company shall have no liability under any warranty in any amount greater than the Company receives for the sale of the product involved. The use and manner of use of the Company's products shall be the responsibility of the purchaser and the purchaser covenants and agrees to indemnify and save harmless the Company in respect to any loss and damage that may arise through the use by the purchaser, or others, of any of the Company's products.

This warranty is rendered void and International Biomedical cannot be held liable for conditions resultant therefrom if:

1. Damage to the unit is incurred as a result of mishandling.
2. The customer fails to maintain the unit in a proper manner.
3. The customer uses any parts, accessories, or fittings not specified or sold by International Biomedical.
4. Sale or Service is performed by a non-certified service / dealer agency or any other unauthorized agency.

All shipping claims must be made within 30 days from date of shipment from International Biomedical, otherwise factory will not be liable for claims of missing items. Any item ordered in error and returned to the factory for credit, will be subject to a minimum restocking charge of 15%. Requests for returning items must be made within 30 days of factory shipment date. International Biomedical will accept no returned goods without a Returned Material Authorization number (RMA) obtained from Customer Service Department.

# Appendix A Specifications

## Operating, Storage, and Transport Environment

| | |
|---|---|
| **Storage:** | |
| Temperature | -25° C to 60° C<br>(Remove battery prior to transport or storage. Allow incubator to stabilize at room temperature for at least 4 hours after storage.) |
| Humidity | 5% to 95% non-condensing |
| Pressure | 50 kPa to 110 kPa |
| **Transient Operating:** | |
| Temperature | -20° C to 50° C |
| Humidity | 5% to 95% non-condensing |
| Pressure | 70 kPa to 110 kPa |
| **Operational:** | |
| Temperature | 15° C to 40° C |
| Humidity | 5% to 95% non-condensing |
| Pressure | 70 kPa to 110 kPa |

## General Mechanical Specifications

| | **Height**<br>inches (cm) | **Width**<br>inches (cm) | **Depth**<br>inches (cm) | **Weight**<br>lbs. (kg) |
|---|---|---|---|---|
| Incubator without infant chamber or handles | 10.7 (27.2) | 32.1 (81.5) | 18.4 (40.5) | 65 (29.5) |
| Low Profile Infant Chamber | 11.3 (28.7) | 30 (76.2) | 16.7 (42.4) | 18.9 (8.6) |
| XL Infant Chamber | 13.3 (33.8) | 30 (76.2) | 16.7 (42.4) | 21.1 (9.6) |

| Item | Dimensions (Inches) | Dimensions (Centimeters) |
|---|---|---|
| Mattress dimensions | 12.5 × 24 × 1 in | 31.8 × 61.0 × 2.5 cm |
| **Infant Vertical Clearance:** | | |
| Low Profile Chamber | 7.5 in | 19.0 cm |
| XL Chamber | 9.5 in | 24.1 cm |
| **Front Access Door with2 hand ports:** | | |
| Low Profile Chamber | 10.3 in H × 22.5 in W | 26.1 cm H × 57.2 cm W |
| XL Chamber | 11.6 in H × 22.5 in W | 26.1 cm H × 57.2 cm W |

## Electrical Specifications

| | |
|---|---|
| AC Power (Max) | 100-240 VAC, 50 - 60 Hz, 2000 VA Max |
| AC Power (Incubator) | 100-240 VAC, 50 - 60 Hz, 3 A Max |
| Accessory outlets (AC) | 7 A Max Total, at input voltage |
| External DC Power Input | 12-28 V, 15 A |
| External DC Power Output | 3 A, at input voltage |
| Internal Battery | 12 V 26 AH Sealed Lead/Acid |
| | 12 V 32 AH Lithium Iron Phosphate |
| Battery Life | Approx. 200 cycles (SLA) |
| | 1000 cycles ($LiFePO_4$) |
| Nominal Battery Recharge (90%) Time | 4.5 Hr. on AC, Unit Off |
| Nominal Battery Operation Time (SLA) | 4 Hr. Chamber at 37° C Ambient 20° C |
| Observation Light | 10 Watt Max |
| Phototherapy Light Option | 10 Watt Max |
| Heated Mattress Option | 22 Watt Max |
| Suction Option | 20 Watt Max |

## Operational Specifications

| | |
|---|---|
| Temperature Setpoint - Air Temp | 17° C to 38.9° C, 0.1° C increments |
| Temperature Setpoint - Baby Temp | 33.0° C to 37.5° C, 0.1° C increments |
| Digital Display Resolution | 0.1° C |
| Digital Display Accuracy | ± 1° C in range 15° to 40° C |
| Warmup Time[1] Chamber | 12 minutes ± 20%, Low Profile chamber |
| | 16 minutes ± 20%, XL chamber |
| Heated Mattress Option | 40° C Max |
| Carbon Dioxide Concentration[2] | < 0.5% |
| Maximum Infant Weight | 22 lb (10 kg) |
| Temperature Display update period | 1 second |
| Alarm Volume | Max Volume - 65 dB (@3m)<br>Min Volume - 50 dB (@3m) |

## Pulse Oximeter Specifications (Optional Feature)

### Range

| **During No Motion Conditions** | |
|---|---|
| Oxygen Saturation | 1% - 100% |
| Pulse Rate | 25-239 bpm |
| Perfusion Index (Masimo Only) | 0.02% to 20% |
| **During Motion Conditions** | |
| Oxygen Saturation | 1% - 100% |
| Pulse Rate | 48-127 bpm |
| Perfusion Index (Masimo Only) | 0.02% to 20% |

[1] As determined by IEC 60601-2-20, clause 201.12.1.107. Time to rise 11° C, when control temperature is set 12° C above ambient.

[2] As determined by IEC 60601-2-20, clause 201.12.4.2.101. Measured 15 cm from 4% $CO_2$ mixture administered at rate of 750 ml/min, 10 cm above center of mattress.

### Resolution

| | |
|---|---|
| Oxygen Saturation | 1% |
| Pulse Rate | 1 bpm |

### Sensor Peak Wavelengths

| | |
|---|---|
| Masimo | 660 nm (red light), 905 nm (infrared light) |
| Nellcor | 660 nm (red light), 900 nm (infrared light) |

### Sensor Maximum Power Output

| | |
|---|---|
| Masimo | less than 15 mW (at 50 mA pulsed) |
| Nellcor | less than 15 mW |

## Masimo Sensor Accuracy[3,4,5,6]

| | | |
|---|---|---|
| **During No Motion Conditions[7]** | | |
| Oxygen Saturation - Neonates | 70 - 100% | ± 3% |
| | 0 - 69% | unspecified |
| Oxygen Saturation - Pediatrics | 70 - 100% | ± 2% |
| | 0 - 69% | unspecified |
| Pulse Rate - Neonates / Pediatrics[8] | 25 - 239 bpm | ± 3 bpm |
| **During Motion Conditions[9,10]** | | |
| Oxygen Saturation - Neonates / Pediatrics | 70 - 100% | ± 3% |
| | 0 - 69% | unspecified |
| Pulse Rate - Neonates / Pediatrics[5] | 25 - 239 bpm | ± 5 bpm |
| **Low Perfusion (where 0.02% Pulse Amplitude and % Transmission > 5%)[11]** | | |
| Oxygen Saturation - Neonates / Pediatrics | ± 2% | |
| Pulse Rate - Neonates / Pediatrics | ± 3 bpm | |

3 See sensor directions for use (DFU) for complete application information. Unless otherwise indicated, reposition reusable sensors at least every 4 hours and adhesive sensors at least every 8 hours.

4 Sensor accuracy specified when used with Masimo technology using a Masimo patient cable for LNOP sensors, RD SET sensors, the LNCS sensors, or the M-LNCS sensors. Numbers represent Arms (RMS error compared to the reference). Because pulse oximeter measurements are statistically distributed, only about two-thirds of the measurements can be expected to fall within a range of ± Arms compared to the reference value. Unless otherwise noted, $SpO_2$ accuracy is specified from 70% to 100%. Pulse rate accuracy is specified from 25 to 240 bpm.

5 Masimo M-LNCS, LNOP, RD SET, and LNCS sensor types have the same optical and electrical properties and may differ only in application type (adhesive/non-adhesive/hook & loop), cable lengths, optical component locations (top or bottom of sensor as aligned with cable), adhesive material type/size, and connector type (LNOP 8-pin modular plug, RD 15-pin modular plug, LNCS 9-pin, cable based, and M-LNCS 15-pin, cable based). All sensor accuracy information and sensor application instructions are provided with the associated sensor directions for use.

6 The measured $SpO_2$ accuracy values per decade are representative values applicable to the described sensor series. For measured $SpO_2$ accuracy values of a specific sensor, refer to the sensor instructions for use or contact the sensor manufacturer.

7 Masimo SET technology with LNCS sensors have been validated for no motion accuracy in human blood studies on healthy adult male and female volunteers with light to dark skin pigmentation in induced hypoxia studies in the range of 70-100% $SpO_2$ against a laboratory co-oximeter and ECG monitor. This variation equals plus or minus one standard deviation, which encompasses 68% of the population. The saturation accuracy of the neonatal sensors was validated on adult male and female volunteers with light to dark skin pigmentation and 1% was added to account for the properties of fetal hemoglobin.

8 The Masimo SET Technology with Masimo sensors has been validated for pulse rate accuracy for the range of 25-240 bpm in bench top testing against a Biotek Index 2™ simulator. This variation equals ± 1 standard deviation. Plus or minus one standard deviation encompasses 68% of the population.

9 The Masimo SET Technology with Masimo Neo sensors has been validated for neonatal motion accuracy in human blood studies on healthy male and female volunteers with light and dark skin pigmentation in induced hypoxia while performing rubbing and tapping motions, at 2 to 4 Hz at an amplitude of 1 to 2 cm and a non-repetitive motion between 1 to 5 Hz at an amplitude of 2 to 3 cm in induced hypoxia studies in the range of 70-100% $SpO_2$ against a laboratory CO-oximeter and ECG monitor. This variation equals ± 1 standard deviation. Plus or minus one standard deviation encompasses 68% of the population. 1% has been added to the results to account for the effects of fetal hemoglobin present in neonates.

10 The Masimo SET technology with Masimo sensors has been validated for motion accuracy in human blood studies on healthy adult male and female volunteers with light and dark skin pigmentation in induced hypoxia studies while performing rubbing and tapping motions, at 2 to 4 Hz at an amplitude of 1 to 2 cm and a non-repetitive motion between 1 to 5 Hz at an amplitude of 2 to 3 cm in induced hypoxia studies in the range of 70-100% $SpO_2$ against a laboratory CO-oximeter and ECG monitor. This variation equals ± 1 standard deviation, which encompasses 68% of the population.

11 Masimo SET technology has been validated for low perfusion accuracy in bench top testing against a Biotek Index 2™ simulator and Masimo's simulator with signal strengths of greater than 0.02% and a transmission of greater than 5% for saturations ranging from 70 to 100%. This variation equals ± 1 standard deviation. Plus or minus one standard deviation encompasses 68% of the population.

| **Measured Oxygen Saturation Accuracy per Decade[6]** (M-LNCS/LNCS/LNOP YI Series) | |
|---|---|
| 70 - 80% | ± 0.70% |
| 80 - 90% | ± 0.50% |
| 90 - 100% | ± 0.60% |
| **Measured Oxygen Saturation Accuracy per Decade[6]** (M-LNCS/LNCS Series) | |
| 70 - 80% | ± 0.89% |
| 80 - 90% | ± 1.44% |
| 90 - 100% | ± 1.85% |

The Bland-Altman and correlation plots for Masimo sensor accuracy data are presented below. The clinical studies performed included an adequate representation of darkly pigmented test subjects to ensure accuracy in darkly pigmented patients.

**Bland-Altman for $SpO_2$ (LNOP Sensor): $SaO_2$ vs. ($SpO_2$ - $SaO_2$)**

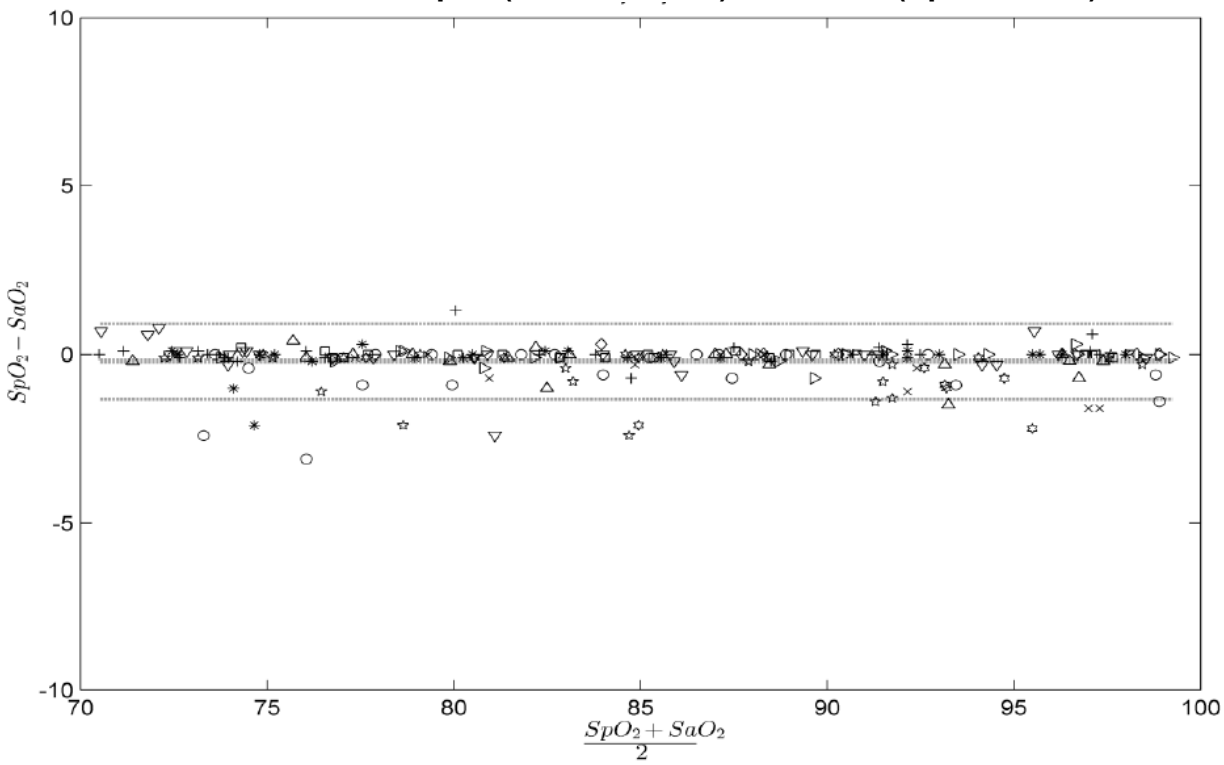

## Correlation Plot for $SpO_2$ (LNOP Sensor): $SaO_2$ vs. $SpO_2$

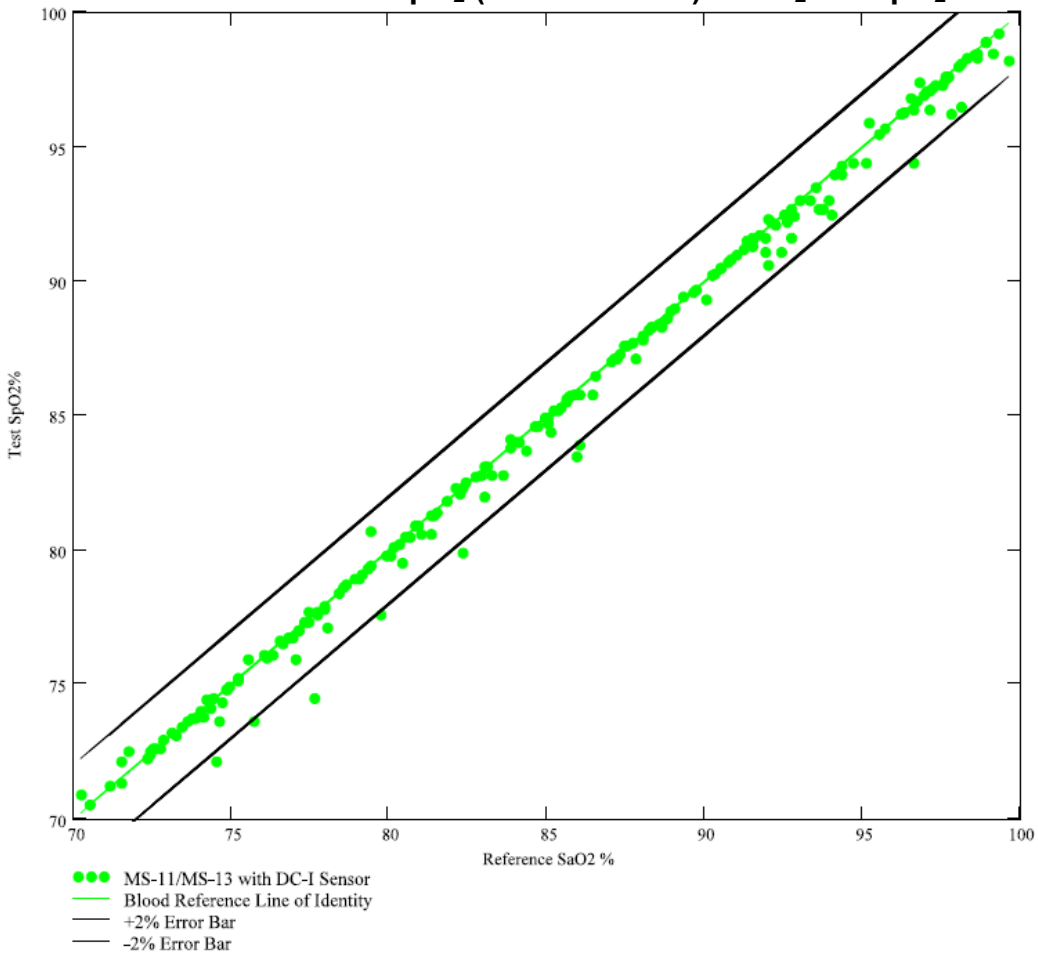

## Nellcor Sensor Accuracy[6,12]

| **During No Motion Conditions** | |
|---|---|
| Oxygen Saturation - 70-100% Range[13,14] | ± 2% (OxiMax Series) |
| Oxygen Saturation - 60-80% Range[13,15] | ± 3% (OxiMax Series) |
| Pulse Rate[12,15] | 20 - 250 bpm ± 3 bpm |
| **During Motion Conditions** | |
| Oxygen Saturation - 70-100% Range[15,16] | ± 3% (OxiMax Series) |
| Pulse Rate[15,16] | 48 - 127 bpm ± 3 bpm |
| **Low Perfusion** | |
| Oxygen Saturation - 70-100% Range[17] | ± 2% |
| Pulse Rate[17] | 20 - 250 bpm ± 3 bpm |

| **Measured Oxygen Saturation Accuracy per Decade[6]** (OxiMax Series) | |
|---|---|
| 70 - 79% | ± 2.01% |
| 80 - 89% | ± 1.66% |
| 90 - 100% | ± 1.46% |

Modified Bland-Altman and correlation plots for Nellcor sensor accuracy data are presented below. The clinical studies performed included an adequate representation of darkly pigmented test subjects to ensure accuracy in darkly pigmented patients. Each individual subject is represented by a unique color on the plots. Subject identification numbers are indicated in the legend to the left of each plot.

---

12 Saturation accuracy varies by sensor type. Refer to the Sensor Accuracy Grid at www.covidien.com/rms.

13 Neonate specifications are shown for OXIMAX MAXN sensors with the Nellcor™ Bedside Respiratory Patient Monitoring System.

14 Clinical functionality of the MAXN sensor has been demonstrated on a population of hospitalized neonate patients. The observed $SpO_2$ accuracy was 2.5% in a study of 42 patients with ages of 1 to 23 days, weight from 750 to 4,100 grams, and 63 observations made spanning a range of 85% to 99% $SaO_2$.

15 Accuracy specifications were validated using measurements of healthy non-smoking adult volunteers during controlled hypoxia studies spanning the specified saturation ranges. Subjects were recruited from the local population and comprised both men and women ranging in age from 18-50 years old, and spanned a range of skin pigmentations. Pulse oximeter $SpO_2$ readings were compared to $SaO_2$ values of drawn blood samples measured by hemoximetry. All accuracies are expressed as ± 1 SD. Because pulse oximeter equipment measurements are statistically distributed, about two-thirds of the measurements can be expected to fall in this accuracy (ARMS) range (refer to the Sensor Accuracy Grid for more details).

16 Motion performance was validated during a controlled hypoxia blood study. Subjects performed rubbing and tapping movements 1-2 cm in amplitude with aperiodic intervals (randomly changing) with a random variation in frequency between 1-4 Hz. Applicability: OXIMAX MAXA, MAXAL, MAXP, MAXI, and MAXN sensors.

17 Specification applies to Nellcor™ Bedside Respiratory Patient Monitoring System oximeter performance. Reading accuracy in the presence of low perfusion (detected IR pulse modulation amplitude 0.03% - 1.5%) was validated using signals supplied by a patient simulator. $SpO_2$ and pulse rate values were varied across the monitoring range over a range of weak signal conditions and compared to the known true saturation and pulse rate of the input signals.

## Bland-Altman for $SpO_2$ (All Data): $SaO_2$ vs. ($SpO_2$ - $SaO_2$)

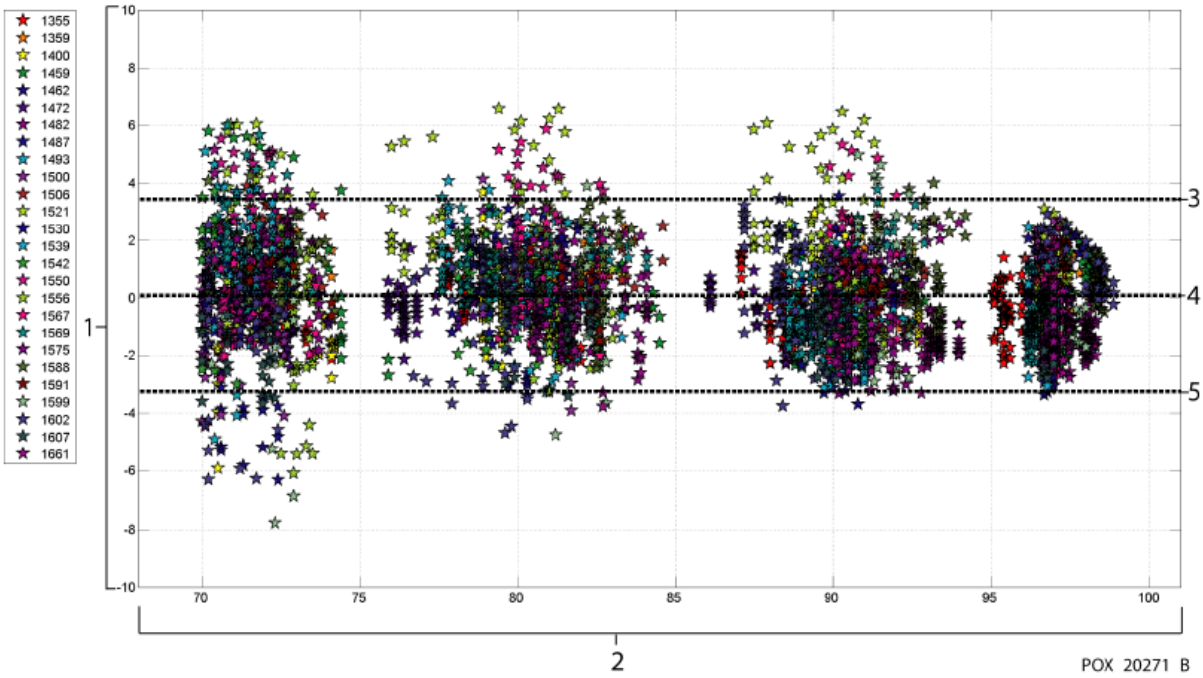


| | | | |
|---|---|---|---|
| 1 | SpO2 - SaO2 (%) | 3 | Upper 95% LoA |
| 2 | SaO2 (%) | 4 | Mean Bias |
| | | 5 | Lower 95% LoA |

## Correlation Plot for $SpO_2$ (All Data): $SaO_2$ vs. $SpO_2$

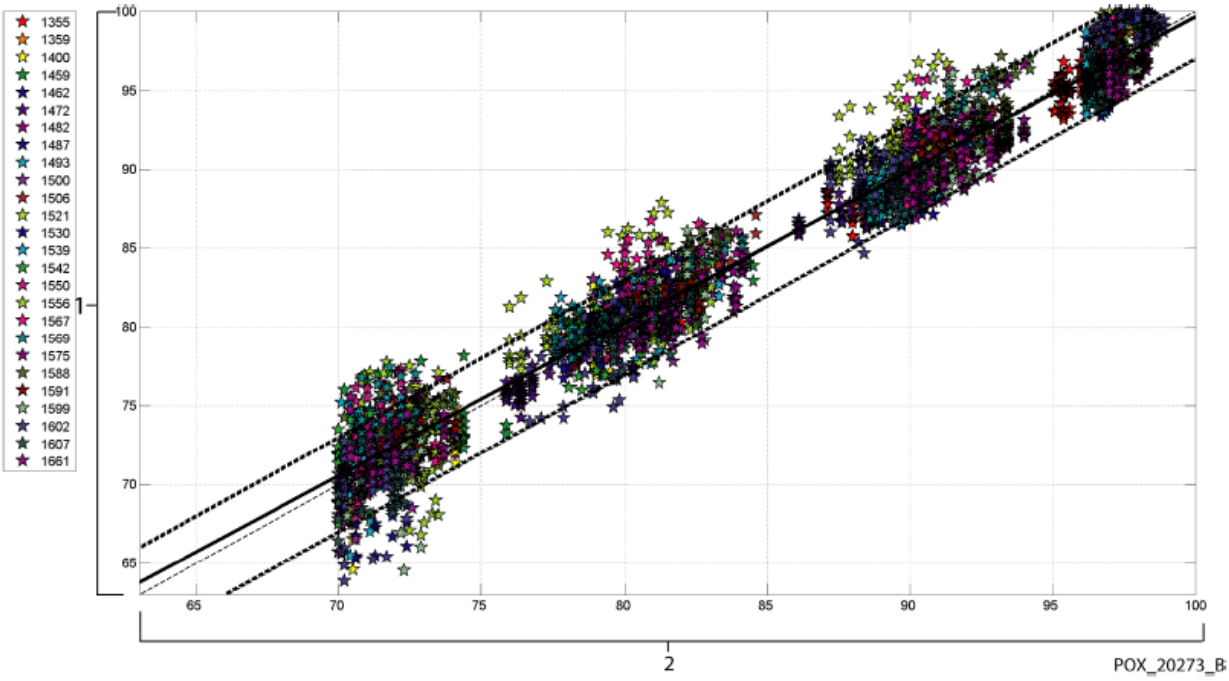


| | | | |
|---|---|---|---|
| 1 | SpO2 (%) | 2 | SaO2(%) |

**Interfering Substances**

Carboxyhemoglobin may erroneously increase readings. The level of increase is approximately equal to the amount of carboxyhemoglobin present. Dyes, or any substance containing dyes, that change usual arterial pigmentation may cause erroneous readings.

Ambient Oxygen Monitor Specifications (Optional Feature)

| | |
|---|---|
| Measurement Range | 10.0% to 100% |
| Resolution | 0.1% |
| Response Time | < 16 seconds for 90% response |
| | < 25 seconds for 97% response |
| Accuracy | ± 4.0% over measurement range |
| Stability | Less than 2% drift over 8 hours at constant temperature and pressure |
| Required Sample Flow | Minimal 3cc/minute, 100cc/minute typical |
| Operating Temperature | 5° to 40° C (31° - 104° F) |

**Interfering Substances**

| Interferent | Volume % Dry | Interference in Oxygen Reading |
|---|---|---|
| Nitrous Oxide | 75% | < 2% |
| Carbon Dioxide | 10% | < 2% |
| Halothane | 5% | < 2% |
| Enflurane | 5% | < 2% |
| Isoflurane | 5% | < 2% |
| Helium | 70% | < 2% |
| Sevoflurane | 6% | < 2% |
| Desflurane | 15% | < 2% |

Phototherapy Specifications

| | | |
|---|---|---|
| Light Spectrum Range | 450 - 465 nm | |
| Maximum Irradiance at mattress | Low Chamber: | 35 µW/cm2/nm (Light Bar @ 7.8” above mattress) |
| | XL Chamber: | 22 µW/cm2/nm (Light Bar @ 9.8” above mattress) |
| Effective Irradiated Area | Low Chamber: | 12.3 in × 9.2 in ellipse |
| | XL Chamber: | 15.1 in × 10.8 in ellipse |
| Light Expected Life | 8 Years (Not user serviceable) | |
| Light Pre-Aging Time | Not Required | |
| Audible Noise Level | < 60 dB | |
| Light Stabilization Period | < 5 Seconds | |
| Intensity Ratio $E_{bi\ min}/E_{bi\ max}$ | > 40% | |
| Light Heat Output | < 10° C Warmer then Ambient | |
| Phototherapy Light Variation in Intensity over 5 hrs after Warm-Up | < 10% | |

Observation Light Specifications

| | |
|---|---|
| Audible Noise Level | < 60 dB |
| Intensity (minimum) | 150 Lumens |
| Light Heat Output | < 10° C Warmer then Ambient |

Suction Specifications

| | |
|---|---|
| Operating, Storage, and Transport Environment | See General Operating, Storage, and Transport Environment specifications. |
| Airflow at Vacuum Inlet | 10 LPM |
| Vacuum Maximum Pressure | 150 mmHg<br>(Actual value can be between 108-163 mmHg.) |
| Vacuum Pressure Range | 10-150 mmHg |
| Vacuum Indicator Accuracy | ± 5 mmHg |
| Noise Level | < 60 dB |
| Suction Canister Volume (up to 20 deg incline) | 800 mL |
| Suction Canister | 738-1701 |
| 18” Suction Tubing | 738-1702 |
| 72” Suction Tubing | 738-2355 |
| Vacuum Filter | 738-1657 |

EMC Compliance

The Transport Incubator has been tested and found to comply with limits for electromagnetic interference and susceptibility as defined by IEC 60601-1-2. However, this equipment may radiate radio frequency (RF) energy and may cause harmful interference to other devices. The Transport Incubator is intended for use in an electromagnetic environment in which radiated RF disturbances are controlled. The customer or the operator of the Transport Incubator can help prevent electromagnetic interference by operating the device in the environments and with the minimum separation distances specified below. Additionally, periodic maintenance as specified by International Biomedical will allow the device to continue to provide basic safety and essential performance.

**GUIDANCE AND MANUFACTURER'S DECLARATION - EMISSIONS**

The Transport Incubator is intended for use in the electromagnetic environment specified below. The customer or operator of the Transport Incubator should ensure that it is used in such an environment.

| EMISSIONS TEST | COMPLIANCE | ELECTROMAGNETIC ENVIRONMENT - GUIDANCE |
|---|---|---|
| RF Emissions CISPR 11 | Group 1 | The Transport Incubator uses RF energy only for its internal function. Therefore, its RF emissions are very low and are not likely to cause any interference in nearby electronic equipment. |
| Conducted Emissions CISPR 11 | Class A | The Transport Incubator is suitable for use in all establishments, including domestic, and those directly connected to the public low-voltage power supply network that supplies buildings used for domestic purposes. |
| Harmonics IEC 61000-3-2 | Class A | |
| Flicker IEC 61000-3-3 | Complies | |

## GUIDANCE AND MANUFACTURER'S DECLARATION - IMMUNITY

The Transport Incubator is intended for use in the electromagnetic environment specified below. The customer or operator of the Transport Incubator should ensure that it is used in such an environment.

| IMMUNITY TEST | IEC 60601 TEST LEVEL | COMPLIANCE LEVEL | ELECTROMAGNETIC ENVIRONMENT - GUIDANCE |
|---|---|---|---|
| ESD<br>IEC 61000-4-2 | ± 8 kV Contact<br>± 15 kV Air | ± 8 kV Contact<br>± 15 kV Air | Floors should be wood, concrete, or ceramic tile. If floors are synthetic, the r/h should be at least 30%. |
| EFT<br>IEC 61000-4-4 | ± 2 kV Mains<br>± 1 kV I/Os | ± 2 kV Mains<br>± 1 kV I/Os | Mains power quality should be that of a typical commercial or hospital environment. |
| Surge<br>IEC 61000-4-5 | ± 0.5/1 kV Differential<br>± 0.5/1/2 kV Common | ± 0.5/1 kV Differential<br>± 0.5/1/2 kV Common | Mains power quality should be that of a typical commercial or hospital environment. |
| Voltage Dips/Dropout<br>IEC 61000-4-11 | 100% Dip for 0.5 Cycle<br><br>60% Dip for 5 Cycles<br><br>30% Dip for 25/35 Cycles<br><br>100% Dip for 250/350 Cycles | 100% Dip for 0.5 Cycle<br><br>60% Dip for 5 Cycles<br><br>30% Dip for 25/35 Cycles<br><br>During the 5 Second event, the Transport Incubator switches to internal battery power. | Mains power quality should be that of a typical commercial or hospital environment. If the operator of the Transport Incubator requires continued operation during power mains interruption, it is recommended that the Transport Incubator be powered from an uninterruptible power supply or internal battery. |
| Power Frequency 50/60 Hz Magnetic Field<br>IEC 61000-4-8 | 30 A/m | 30 A/m | Power Frequency magnetic fields should be that of a typical commercial or hospital environment. |

## GUIDANCE AND MANUFACTURER'S DECLARATION - IMMUNITY

The Transport Incubator is intended for use in the electromagnetic environment specified below. The customer or operator of the Transport Incubator should ensure that it is used in such an environment.

| IMMUNITY TEST | IEC 60601 TEST LEVEL | COMPLIANCE LEVEL | ELECTROMAGNETIC ENVIRONMENT - GUIDANCE |
|---|---|---|---|
| Conducted RF<br>IEC 61000-4-6 | 3 Vrms<br>150 kHz to 80 MHz (AC/DC)<br><br>6 Vrms<br>(in ISM Bands between 150kHz and 80MHz) | 3 Vrms<br>150 kHz to 80 MHz (AC/DC)<br><br>6 Vrms<br>(in ISM Bands between 150kHz and 80MHz) | Portable and mobile communications equipment should be separated from the Transport Incubator by no less than the distances calculated/listed below:<br><br>D= $\frac{3.5}{V_1}\sqrt{\mathbf{P}}$<br><br>D= $\frac{3.5}{E_1}\sqrt{\mathbf{P}}$<br>80 to 800 MHz<br><br>D= $\frac{7}{E_1}\sqrt{\mathbf{P}}$<br>800 MHz to 2.7 GHz |
| Radiated RF<br>IEC 61000-4-3 | 3 V/m<br>80 MHz to 2.7 GHz | 3 V/m<br>80 MHz to 2.7 GHz<br><br>($V_1$) Vrms<br><br>($E_1$) V/m | Where P is the max power in watts and D is the recommended separation distance in meters.<br><br>Field strengths from fixed transmitters, as determined by an electromagnetic site survey, should be less than the compliance levels ($V_1$ and $E_1$).<br><br>Interference may occur in the vicinity of equipment containing a transmitter. |
| Proximity fields from RF Wireless Communication Equipment<br>IEC61000-4-3 | See IEC 60601-1-2 8.10 | See IEC 60601-1-2 8.10 | This equipment should be placed no closer than 30 cm from the nearest RF Wireless communication device. |

## RECOMMENDED SEPARATION DISTANCES BETWEEN PORTABLE AND MOBILE RF COMMUNICATIONS EQUIPMENT AND THE TRANSPORT INCUBATOR

The Transport Incubator is intended for use in the electromagnetic environment in which radiated disturbances are controlled. The customer or operator of the Transport Incubator can help prevent electromagnetic interference by maintaining a minimum distance between portable and mobile RF Communications Equipment and the Transport Incubator as recommended below, according to the maximum output power of the communications equipment.

| MAX OUTPUT POWER (WATTS) | SEPARATION (m) 150 kHz to 80 MHz $D=(3.5/V_1)(\text{Sqrt } P)$ | SEPARATION (m) 80 to 800 MHz $D=(3.5/E_1)(\text{Sqrt } P)$ | SEPARATION (m) 800 MHz to 2.5 GHz $D=(7/E_1)(\text{Sqrt } P)$ |
|---|---|---|---|
| 0.01 | 0.12 | 0.12 | 0.23 |
| 0.1 | 0.37 | 0.37 | 0.74 |
| 1 | 1.17 | 1.17 | 2.33 |
| 10 | 3.69 | 3.69 | 7.38 |
| 100 | 11.67 | 11.67 | 23.33 |

- The accuracy of the set temperature to the Transport Incubator temperature will be maintained within ± 2° C at ambient temperatures between 10 and 20° C and within ± 1.5° C at an ambient temperature of 25° C ± 1° C for normal operation.
- In the event that the temperature is outside of the prescribed range, an audible alarm will be supplied.
- The warmup time for the incubator with XL chamber, as defined by 60601-2-20 section 201.12.1.107 is 16 minutes.
- The indication of the temperature shall be accurate within 1° C when measured with a standard thermometer at a point 10 cm above the middle of the mattress.
- The $O_2$ Monitor shall be accurate within 2.5% + 2.5% of gas level (Volume Fraction of Gas Level).
- When the power supply falls outside of the normal values for operation, the incubator shall switch over to its internal battery, and shall display an indicator that the device is operating on battery power.
- For incubators equipped with $SpO_2$ capability, the $SpO_2$ accuracy shall be less than or equal to 4% over the range of 70-100% $SaO_2$.
- For incubators equipped with $SpO_2$ capability, the Pulse Rate accuracy shall be less than or equal to 5 bpm over the range of 25-240 bpm.
- For incubators equipped with $SpO_2$ capability, $SpO_2$ level low shall create an audible and visual alarm.
- For incubators equipped with $SpO_2$ capability, alarms shall be generated in the event of probe or patient cable failures, or if the $SpO_2$ system is incapable of updating the measured data for a period of 30 seconds.
- No ME equipment in patient compartment poses a risk in oxygen rich environment.
- The Transport Incubator parts likely to be touched do not exceed the values listed in 60601-1 Table 23.
- The user interface is not able to set the temperature higher than thermal safety limits in accordance with Transport Incubator standard.
- Air temp, FET temp, and Heatsink temp are measured in parallel with the patient temperature. The heater will cut out or alarm if air temperature is raised to an unsafe condition.
- With the infant Transport Incubator working in the baby controlled Transport Incubator mode with horizontal mattress orientation, the temperature as measured by the skin temperature sensor shall not differ from the control temperature by more than 0.7° C in steady temperature condition.
- In the event that the temperature is outside the prescribed range, an audible alarm will be supplied.
- The function of the incubator does not alter the stated accuracy of the OEM Pulse Oximetry devices.

## Appendix D Alarms and Alerts

| Alarm Description | Alarm Condition | Priority | Alarm Type | Audio Pause Duration |
|---|---|---|---|---|
| % $O_2$ is High | The measured value from the $O_2$ sensor is greater than the max alarm limit. | Medium | Clinical | 2 |
| % $O_2$ is Low | The measured value from the $O_2$ sensor is less than the min alarm limit. | Medium | Clinical | 2 |
| AC Power Removed | External AC power has been removed. | Low | Clinical | Acknowledge |
| Air Temp Sensor Error | An error has occurred with the chamber air temperature sensors. | High | System | 5 |
| Air Temp Sensor Error | The device is not sensing an increase in chamber temperature while the heater is active. | High | System | 5 |
| Airflow Blocked - Heater Off | The heater fan outlet is obstructed. | Medium | Clinical | 5 |
| Airflow Error - Heater Off | The heater fan is obstructed. | Medium | Clinical | 5 |
| Airflow Fan Slow – Heater Off | | | | |
| Baby Cold - Check Baby | Baby temperature is 1.2° C less than set point. | High | Clinical | 2 |
| Baby Cold - Check Baby | Baby temperature is 0.7° C less than set point. | Medium | Clinical | 5 |
| Baby Hot - Check Baby | Baby temperature is 1.2° C greater than set point. | High | Clinical | 2 |
| Baby Hot - Check Baby | Baby temperature is 0.7° C greater than set point. | Medium | Clinical | 5 |
| Battery Disconnected | The internal DC power has been disconnected. | Medium | System | Acknowledge |
| Battery Temp Range Exceeded | The temperature of the device's battery is above, or below, safe limits. | Low | System | 5 |
| Buzzer Failure | There is an error with the technical error buzzer. | High | System | 5 |
| Chamber Cold - Check Baby | Chamber air temperature is 2.0° C less than set point. | High | Clinical | 2 |
| | | | | 30 on-boot |
| Chamber Cold - Check Baby | Chamber air temperature is 1.5° C less than set point. | Medium | Clinical | 5 |
| | | | | 30 on-boot |
| Chamber Hot - Check Baby | Chamber air temperature is 2.0° C greater than set point. | High | Clinical | 2 |

| Alarm Description | Alarm Condition | Priority | Alarm Type | Audio Pause Duration |
|---|---|---|---|---|
| Chamber Hot - Check Baby | Chamber air temperature is 1.5° C greater than set point. | Medium | Clinical | 5 |
| Chamber Temp Delayed | The device is not sensing an increase in chamber temperature while the heater is active. | High | System | 5 |
| Chamber Temp Limit – Check Baby | The chamber air temperature is above 40.0° C. | High | Clinical | Acknowledge |
| Check $SpO_2$ cable and sensor | There is an error with the $SpO_2$ cable and sensor. | Low | Clinical | 2 |
| Check $SpO_2$ Sensor Connection | $SpO_2$ hardware has detected an error with the $SpO_2$ sensor connection. | Low | Clinical | 2 |
| Connect Mattress Cord | The heated mattress cable has been unplugged from the connector panel. | Medium | Clinical | Acknowledge |
| Connect $SpO_2$ Sensor | The $SpO_2$ adhesive sensor has been disconnected. | Low | Clinical | 2 |
| Connect Temperature Probe | Primary patient temperature probe has been disconnected while the device is in servo mode. | Low | Clinical | 2 |
| Critically Low Battery | The battery charge is at 7% or less. | High | System | 2 |
| Heater Error | The chamber air temperature is above 40.0° C. | High | Clinical | Acknowledge |
| Incompatible $SpO_2$ Sensor | The $SpO_2$ hardware does not recognize the attached adhesive sensor. | Low | Clinical | 2 |
| Internal $SpO_2$ Error | An error has occurred with the $SpO_2$ hardware. | Low | System | 2 |
| Low Battery | The battery charge is at 10% or less. | Medium | System | 2 |
| Mattress Error - Mattress Off | An error has occurred with the heated mattress. | Medium | System | 5 |
| No Temp Probe - Exit Servo Mode | The primary patient temperature probe has been disconnected from more than 1 minute in servo mode and the device has transitioned to air mode. | Medium | Clinical | Acknowledge |

| Alarm Description | Alarm Condition | Priority | Alarm Type | Audio Pause Duration |
|---|---|---|---|---|
| $O_2$ < 18% | The oxygen value measured by the $O_2$ sensor is below 18%. | High | Clinical | 2 |
| Patient Temp Error | Device is having trouble reading temperature from primary temperature probe. | Low | System | 2 |
| Power Fail | System voltage is critically low. | Technical Error | Technical | 5 |
| Pulse Rate is High | The pulse rate measured value from the pulse oximeter is greater than the max alarm limit. | Medium | Clinical | 2 |
| Pulse Rate is Low | The pulse rate measured value from the pulse oximeter is less than the min alarm limit. | Medium | Clinical | 2 |
| Replace Temperature Probe | The primary temperature probe needs to be replaced. | Low | System | 2 |
| Speaker Failure | There is an error with the device's speaker. | Low | System | Acknowledge |
| $SpO_2$ Interference Detected | Interference has been detected with the $SpO_2$ sensor. | Low | Clinical | 2 |
| $SpO_2$ is High | The $SpO_2$ measured value from the pulse oximeter is greater than the max alarm limit. | Medium | Clinical | 2 |
| $SpO_2$ is Low | The $SpO_2$ measured value from the pulse oximeter is less than the min alarm limit. | Medium | Clinical | 2 |
| Suction Error | An error has occurred with the suction hardware. | Low | System | 5 |
| Suction too high | The suction pressure is above a safe limit. | Low | Clinical | Acknowledge |
| System Fail | There is an error with a critical system function. | High | System | Acknowledge |
| Touch Screen Failure | An error has occurred with the touch screen functionality. | Medium | System | Acknowledge |
| Wheel Encoder Failure | An error has occurred with the wheel functionality. | Medium | System | Acknowledge |

| Alert Description | Alert Condition | Priority |
|---|---|---|
| AC Connected | External AC power has been connected. | Alert |

| Alert Description | Alert Condition | Priority |
|---|---|---|
| Battery Error | The device battery's chemistry does not match the detected battery chemistry. | Alert |
| Charge Battery | The device's battery needs to be charged. | Alert |
| CONFIG | Could not detect manufacturer configuration file. | Alert |
| Configuration Error | Error reading configuration file | Alert |
| Configure Battery | The battery has not been configured in the service menu. | Alert |
| Connect $O_2$ Cable | The $O_2$ monitor cable has been disconnected. | Alert |
| Connect $SpO_2$ Cable | The $SpO_2$ cable is not connected to the device. | Alert |
| Connect $SpO_2$ Sensor | An $SpO_2$ sensor is not connected or is not recognized by the $SpO_2$ hardware. | Alert |
| Cover Infant's Eyes | Protect infant's eyes from phototherapy light. | Alert |
| Critical Battery Error | The battery is below expected value. | Alert |
| DC connected | External DC power has been connected. | Alert |
| Driver not found | Device driver is not found. | Alert |
| EXT DC Power Removed | External DC power has been disconnected. | Alert |
| File Not Found | A file was not located. | Alert |
| File System Error | The file system has detected an error. | Alert |
| Heater COM Error | System is unable communicate with heater board. | Alert |
| Heater Over Temperature | The heater temperature is out of bounds. | Alert |
| Incompatible $SpO_2$ cable | The $SpO_2$ hardware does not recognize the connected $SpO_2$ cable. | Alert |
| Incompatible $SpO_2$ sensor | The $SpO_2$ hardware does not recognized the $SpO_2$ sensor. | Alert |
| Internal $SpO_2$ Failure | An Error has occurred with the $SpO_2$ Hardware. | Alert |
| Invalid Battery | The device battery's capacity does not match the detected battery capacity. | Alert |
| Light Bar Disconnected | Light Bar is not connected. | Alert |
| Light Bar Failure | Error starting light bar | Alert |
| Low Battery | Internal DC power is low. | Alert |
| Low $SpO_2$ Signal IQ | The $SpO_2$ sensor is not placed correctly. | Alert |
| Media Read Failure | Error reading from SD card | Alert |
| Media Write Failure | Error writing to SD card | Alert |
| Mode Change - Set Temp | The heater mode has changed automatically. | Alert |
| $O_2$ CAL IN PROGRESS | System is preforming $O_2$ sensor calibration. | Alert |
| $O_2$ Calibration Error | The $O_2$ sensor calibration has failed. | Alert |
| $O_2$ Disabled | The $O_2$ monitor has been disabled on main screen. | Alert |
| $O_2$ Monitor Failure | An error has occurred with the $O_2$ monitor. | Alert |
| Perfusion Index is Low | The $SpO_2$ perfusion index is low. | Alert |
| Phototherapy Interrupted | The phototherapy light was disconnected during treatment. | Alert |

| Alert Description | Alert Condition | Priority |
|---|---|---|
| Pulse Search | The $SpO_2$ hardware is searching for a pulse. | Alert |
| Replace $SpO_2$ cable | The $SpO_2$ cable needs to be replaced. | Alert |
| Replace $SpO_2$ Cable Next Patient | The $SpO_2$ sensor needs to be replaced soon. | Alert |
| Replace $SpO_2$ Sensor | Replace the $SpO_2$ sensor. | Alert |
| RTC Error | Real Time Clock Failure | Alert |
| SD Card Error | Error Opening SD card | Alert |
| SD Card Error | An Error has occurred with the SD Card. | Alert |
| SD Card Full | The SD card is full. | Alert |
| Service Clock | Error with service clock | Alert |
| Set Clock | Device Clock is not set. | Alert |
| $SpO_2$ Demo-Mode | The $SpO_2$ hardware has been placed in demo mode. | Alert |
| $SpO_2$ Interference Detected | The $SpO_2$ hardware has detected too much interference with the $SpO_2$ sensor. | Alert |
| $SpO_2$ Only-Mode | The $SpO_2$ hardware is setup for only $SpO_2$, not Pulse rate. | Alert |
| $SpO_2$ Sensor Initializing | The $SpO_2$ sensor is initializing. | Alert |
| $SpO_2$ Sensor Off Patient | The $SpO_2$ sensor is not attached to the patient. | Alert |
| $SpO_2$/PR Disabled | $SpO_2$/PR monitor has been disabled on main screen. | Alert |
| Suction Disconnected | The suction device has been disconnected. | Alert |
| Suction Timeout | The suction device has been active for more than 10 minutes, while the heated mattress has been enabled. | Alert |
| Timer Expired | Operator set timer has finished. | Alert |
| USB Full | The removable digital media is full. | Alert |
| USB Media Failure | Error has occurred with removable digital media. | Alert |
| USB Open Error | Error opening removable digital media | Alert |
| USB Read Error | Error reading removable digital media | Alert |
| USB Write Error | Error writing to removable digital media | Alert |

## Appendix E Product Disposal/Recycle

The incubator should be returned to International Biomedical for recycling when it reaches the end of its life (8 years). The incubator's battery can be taken to any battery recycling facility when it reaches the end of its life.

Environmental Requirements

International Biomedical is concerned about protecting the natural environment and helps to ensure continued safe and effective use of this product through proper support, maintenance, and training. International Biomedical equipment is therefore designed and manufactured to comply with relevant guidelines for environment protection. As long as the equipment is properly operated and maintained, it presents no risk to the environment. However, the equipment may contain materials which could be harmful to the environment if disposed of incorrectly. Use of such materials is essential for the implementation of certain functions and for meeting certain statutory and other requirements.

International Biomedical gives support for:

- Recovery of reusable parts
- The recycling of useful materials by competent disposal companies
- Safe and effective disposal of equipment
- For advice and information, contact your International Biomedical Service Organization