AeroNOx

Portable Nitric Oxide Titration & Monitoring System

Technical Manual

international BIOMEDICAL®

AeroNOx
Portable Nitric Oxide
Titration & Monitoring System
Technical Manual

- ***Phone: (512) 873-0033***
- ***Fax: (512) 873-9090***
- ***E-Mail: sales@int-bio.com***
- ***Website: http://www.int-bio.com***

- ***Mailing address:***

  International Biomedical
  8206 Cross Park Dr.
  Austin, TX 78754
  USA

- ***Authorized representative in Europe for Regulatory Affairs:***

  Emergo Europe
  Westervoortsedijk 60
  6827 AT
  Arnhem, The Netherlands

Table of Contents

List of Illustrations vii
List of Tables viii
SYMBOLS viii
CLASSIFICATION ix

SECTION 1 SPECIFICATIONS 1-1
INTRODUCTION 1-2
ACCESSORIES 1-2
PERFORMANCE CONDITIONS 1-3
SECTION 2 THEORY OF OPERATION 2-1
INTRODUCTION 2-2
SECTION ORGANIZATION 2-2
INTEGRATED CIRCUIT DESCRIPTIONS 2-2
DIGITAL LOGIC CONVENTIONS 2-2
LINEAR DEVICES 2-2
GENERAL DESCRIPTION 2-2
GENERAL 2-2
ANALYSIS SYSTEM 2-3
DELIVERY SYSTEM 2-3
DETAILED DESCRIPTION 2-3
GENERAL FEATURES AND OPERATION 2-3
MICROPROCESSOR 2-3
INITIAL STARTUP 2-3
FRONT PANEL 2-4
BATTERY, CHARGER, AND BATTERY MONITOR 2-5
ALARMS 2-5
ERROR AND WARNING MESSAGES 2-6
ANALYSIS SYSTEM 2-6
NITRIC OXIDE AND NITROGEN DIOXIDE SENSORS 2-6
TEMPERATURE EFFECTS 2-7
NITROGEN DIOXIDE ANALYZER CIRCUIT 2-7
NITRIC OXIDE ANALYZER CIRCUIT 2-9
PRESSURE EFFECTS 2-10
TEMPERATURE DEPENDENCE 2-10
HUMIDITY EFFECTS 2-10
HIGH HUMIDITY, HIGH TEMPERATURE 2-10
LOW HUMIDITY, HIGH TEMPERATURE 2-11
CELL HANDLING 2-11

OXYGEN ANALYZER CIRCUIT 2-12
LINEARITY 2-13
CARRIER GAS EFFECTS 2-13
CROSS SENSITIVITY 2-13
TEMPERATURE / PRESSURE DEPENDENCE 2-14
OXYGEN CONCENTRATION VS. HUMIDITY 2-14
OXYGEN CELL HANDLING PRECAUTIONS 2-14
SAMPLING SYSTEM AND SAMPLING SYSTEM MONITOR 2-14
DELIVERY SYSTEM 2-16
ALARMS 2-16
MASS FLOW METER CIRCUIT 2-16
SECTION 3 ADJUSTMENT PROCEDURE 3-1
INTRODUCTION 3-2
PURPOSE 3-2
OUTLINE 3-2
MAINTENANCE AIDS AND TEST EQUIPMENT 3-2
LIMITS AND TOLERANCES 3-3
ADJUSTMENT INTERACTION 3-3
PREPARATION FOR ADJUSTMENT 3-3
PROCEDURES 3-4
INITIAL CONTROL SETTINGS 3-4
ADJUSTING LCD DISPLAY CONTRAST 3-4
ADJUST MASS FLOW METER 3-4
ADJUST -300 MV NO SENSOR BIAS 3-5
ADJUST OXYGEN ANALYZER CIRCUIT 3-5
ADJUST SAMPLING SYSTEM CIRCUIT 3-6
SECTION 4 MAINTENANCE 4-1
INTRODUCTION 4-2
GENERAL CARE, CLEANING, AND INSPECTION 4-2
TROUBLESHOOTING 4-4
INTRODUCTION 4-4
TROUBLESHOOTING AIDS 4-4
TROUBLESHOOTING TECHNIQUE 4-6
TROUBLESHOOTING SYMPTOMS AND SOLUTIONS 4-9
CORRECTIVE MAINTENANCE 4-13
INTRODUCTION 4-13
MAINTENANCE PRECAUTIONS 4-13
OBTAINING REPLACEMENT PARTS 4-13
MAINTENANCE AIDS 4-14
AERONOX PREVENTIVE MAINTENANCE SCHEDULE 4-15
SENSORS 4-15

BATTERY 4-15
POWER SUPPLY CONNECTION 4-16
POTENTIOMETERS (NO, NO_2, O_2) 4-16
POWER SUPPLY FAN 4-17
MAINTENANCE PROCEDURES 4-17
MAINTENANCE PROCEDURES 4-19
BATTERY REPLACEMENT - REMOVAL / INSTALLATION 4-19
REPLACEMENT OF NO AND NO_2 SENSORS 4-19
INITIAL PREPARATIONS 4-19
NO AND NO_2 SENSOR REPLACEMENT 4-19
REASSEMBLE THE CASE 4-20
OXYGEN SENSOR REPLACEMENT 4-21
PUMP CLEANING PROCEDURE FOR AERONOX 4-25
AERONOX SAMPLE RATE ADJUSTMENT PROCEDURE 4-29
AERONOX SAMPLE RATE ADJUSTMENT RECORD FORM 4-35
AERONOX MFM FLOW CHECK / PLUMBING LEAK TEST PROCEDURE 4-37
AERONOX MFM FLOW CHECK / PLUMBING LEAK TEST RECORD FORM 4-44
SECTION 5 DIAGRAMS 5-1
SECTION 6 PARTS LIST 6-1
SECTION 7 APPENDIX 7-1
3NF/F - NITRIC OXIDE SENSOR 7-2
Performance Characteristics 7-2
Physical Characteristics 7-2
Temperature Dependence 7-3
Cross-sensitivity Data 7-3
Ordering Information 7-3
3NDH - NITROGEN DIOXIDE SENSOR 7-4
Performance Characteristics 7-4
Physical Characteristics 7-4
Temperature Dependence 7-5
Cross-sensitivity Data 7-5
Ordering Information 7-5
RECOMMENDED PRACTICES FOR HANDLING OF GAS CYLINDERS AND REGULATORS TO MAINTAIN GAS QUALITY 7-7
CONTAMINATION EFFECTS OF AIR ON NO_2 FORMATION IN NO/N_2 . 7-8

Figure 2-1	SCHEMATIC AND CONVENTIONAL REPRESENTATIONS OF ELECTROCHEMICAL GAS SENSOR	2-6
Figure 2-2	SIMPLIFIED NO_2 CIRCUITRY	2-8
Figure 2-3	SIMPLIFIED NO CIRCUITRY	2-9
Figure 2-4	SIMPLIFIED OXYGEN CIRCUITRY	2-12
Figure 2-5	PUMP CONTROL CIRCUIT	2-15
Figure 2-6	SIMPLIFIED MASS FLOW METER CIRCUIT	2-17
Figure 3-1	EQUIPMENT CONFIGURATION FOR SETTING SAMPLE PUMP FLOW AND CUT-OFF	3-7
Figure 4-1	BATTERY REMOVAL / REPLACEMENT	4-20
Figure 4-2	REMOVAL OF 4 SCREWS TO SEPARATE HALVES	4-21
Figure 4-3	CASE OPENED FOR SERVICING	4-22
Figure 4-4	REMOVAL OF NO_2 PRINTED CIRCUIT BOARD	4-22
Figure 4-5	REMOVAL OF NO_2 CELL	4-23
Figure 4-6	REMOVAL OF O_2 CELL	4-23
Figure 4-7	PUMP POWER CABLE CONNECTOR	4-26
Figure 4-8	PRESSURE SENSOR CABLE CONNECTOR	4-26
Figure 4-9	PUMP ASSEMBLY WITH BLACK BASE EXPOSED FOR SERVICING	4-26
Figure 4-10	DISASSEMBLY OF PUMP	4-27
Figure 4-11	EQUIPMENT CONFIGURATION FOR SETTING SAMPLE FLOW AND RESTRICTED LINE TRIP POINT	4-30
Figure 4-12	METERING VALVE SET SCREW	4-31
Figure 4-13	METERING VALVE LOCKING NUT	4-32
Figure 4-14	PUMP ADJUSTMENT POTENTIOMETERS	4-32
Figure 4-15	ADJUSTMENT OF MFM	4-39
Figure 4-16	GAS CONNECTORS	4-39
Figure 4-17	NITRIC OXIDE LPM DISPLAY POTENTIOMETER	4-42
SECTION 5	DIAGRAMS	5-1
	SCHEMATIC, AERONOX INTERCONNECTION	5-2
	SCHEMATIC, PCBA, SWITCHBOARD, AERONOX	5-3
	SCHEMATIC, PCBA, POWER SUPPLY, AERONOX	5-4
	SCHEMATIC, PCBA, MAIN, AERONOX	5-5
	SCHEMATIC, PCBA, POWER LINE FILTER, AERONOX	5-6

Table 1-1 PERFORMANCE CONDITIONS 1-3
Table 1-2 ENVIRONMENTAL CHARACTERISTICS 1-4
Table 1-3 PHYSICAL CHARACTERISTICS 1-4
Table 1-4 GUIDANCE AND MANUFACTURER'S DECLARATION - EMISSIONS .. 1-5
Table 1-5 GUIDANCE AND MANUFACTURER'S DECLARATION - IMMUNITY 1-6
Table 1-6 GUIDANCE AND MANUFACTURER'S DECLARATION - IMMUNITY 1-7
Table 1-7 RECOMMENDED SEPARATION DISTANCES BETWEEN PORTABLE AND MOBILE RF COMMUNICATIONS EQUIPMENT AND THE AERONOX 1-8
Table 2-1 SWITCH FUNCTIONS AND ASSOCIATED MESSAGES 2-4
Table 2-2 ERROR AND WARNING MESSAGES 2-6
Table 3-1 TOOLS AND EQUIPMENT (ADJUSTMENT PROCEDURE) 3-2
Table 4-1 MAINTENANCE AIDS 4-14

SYMBOLS

The following symbols appear in the AeroNOx documentation and labels. These internationally recognized symbols are defined by the International Electrotechnical Commission, IEC 417A and IEC 878 or by the Institute of Electrical and Electronics Engineers, 315(a).

⎓	Direct current
-⊖+	Positive to center pin, Negative to outer ring of connection
	Recycle or dispose of properly, contains sealed lead batteries
⚠	Attention, consult accompanying documents

CLASSIFICATION

According to the standard EN60601-1 of the International Electrotechnical Commission, *Medical electrical equipment, Part 1: General requirements for safety*, the AeroNOx is classified as follows:

- Class I / Internally Powered, according to the type of protection against electric shock.
- Ordinary, according to the degree of protection against harmful ingress of water.
- Continuous operation for the mode of operation.

SECTION 1

SPECIFICATIONS

SPECIFICATIONS

INTRODUCTION

The AeroNOx is a durable light-weight portable system for inhaled nitric oxide therapy. The integrated nitric oxide gas delivery system and continuous $NO/NO_2/O_2$ monitoring system allows uninterrupted inhaled nitric oxide analysis and administration.

ACCESSORIES

The instrument is shipped with the following standard accessories:

1 - AeroNOx Operating Manual
1 - Medial Grade Power Cord
1 - AeroNOx “NO Worries” connector pack
1 - Universal Power Supply
1 - Stainless Steel Hose with Quick Connect

For part numbers and further information about both standard and optional accessories, contact International Biomedical.

WARNING

Medical Electrical Equipment needs special precautions regarding EMC and needs to be installed and put into service according to the EMC information provided in the Accompanying Documents.

WARNING

Portable and Mobile RF Communications Equipment can affect Medical Electrical Equipment.

WARNING

The use of accessories, transducers, and/or cables other than those specified, with the exception of those sold by International Biomedical as replacement parts for internal components, may result in increased emissions or decreased immunity of the equipment or system.

WARNING

The AeroNOx should not be used adjacent to or stacked with other equipment. If adjacent or stacked use is necessary, the AeroNOx should be observed to verify normal operation in the configuration in which it will be used.

PERFORMANCE CONDITIONS

Table 1-1

CHARACTERISTICS	PERFORMANCE REQUIREMENTS	SUPPLEMENTAL INFORMATION
ANALYSIS SYSTEM		
Gases Detected	Nitric Oxide (NO) Nitrogen Dioxide (NO_2) Oxygen (O_2)	
Range	NO: 0 - 100 ppm NO_2: 0 - 12 ppm O_2: 5 - 100%	
Resolution	NO: 1 ppm NO_2: 0.1 ppm O_2: 0.1% ± 2 counts	12 bit A/D, FS error ± 3 LSB 12 bit A/D, FS error ± 3 LSB
Sensor Accuracy	NO: ± 1 ppm NO_2: ± 0.1 ppm O_2: ± 2% ± 2 counts	
Device Accuracy	NO: ± 2 ppm NO_2: ± 2 ppm O_2: ± 3%	Device accuracy is affected by the ventilator that is attached.
Sampling Rate - O_2	2.5 samples / sec.	
Sampling Rate - NO NO_2	2 samples / sec. 2 samples / sec.	
Display Update - NO NO_2	2 times / sec. 2 times / sec.	8 sample average 8 sample average
Sensor Response Time	NO: <20 sec. NO_2: <30 sec. O_2: <30 sec.	To 90% of final value To 90% of final value To 95% of final value
Long Term Output Drift	NO: <2% loss per month NO_2: <2% loss per month O_2: <2% loss per month	
Gas Sampling Rate	150 cc/min. ± 15%	Sampled gas vented to room air
Delivery System		
Inlet Pressure Recommended	345 Kilopascals	50 psi
Inlet Pressure Absolute Minimum	207 Kilopascals	30 psi
Inlet Pressure Absolute Maximum	517 Kilopascals	75 psi
Flow Control	Manual Metering Valve	Precision - 12 turn
Flow Range	0 - 2 L/min	
Flow Display	3 ½ digit LED	
Resolution	10 ml/min	
Accuracy	± 5% full scale	

CHARACTERISTICS	PERFORMANCE REQUIREMENTS	SUPPLEMENTAL INFORMATION
ELECTRICAL		
Battery	Internal 6 volt rechargeable sealed lead-acid 4.2 Ah/20 hr.	
Operating Time	5 hours on full charge	
Charge Time	6 hours approx.	
Cycle Life	200 cycles approx.	1 year typically
Load Current	800 mA typical maximum	
External Power Supply		Medical grade only
Input Voltage Ranges	100 - 240 Volts	
Line Frequency	50 - 60 Hz	
Input Current	1 Amp Max	
Power Inlet Connection	IEC 60320-C14	
Output Voltage	+ 12 Volts	
Output Current (Max.)	3.3 Amps	Foldback current limiting

Table 1-2
ENVIRONMENTAL CHARACTERISTICS

CHARACTERISTICS	DESCRIPTION
Temperature Operating	 +5 to +40 Deg. C (40 to 104 Deg. F)
Transport/Storage	-20 to + 40 Deg. C (-4 to 104 Deg. F)
Altitude Operating	 Sea level to 3800 meter (sea level to 12000 ft.)
Non-Operating	
Humidity Operating	 0 - 93% non-condensing
Vibration (Non-Operating)	Sine: 10 sweep cycles along each of 3 major axis 1 octave/min 10 - 500 Hz @ 1 G Random: 9 minutes at 20 - 500 Hz @ .02 G^2/Hz on each of 3 axis
Shock (Non-Operating)	30 G's, half sine, 11-ms duration, 3 shocks per axis each direction for total of 18 shocks
EMC	Meets electromagnetic compatibility requirements of IEC 60601-1-2

Table 1-3
PHYSICAL CHARACTERISTICS

CHARACTERISTICS	DESCRIPTION	SUPPLEMENTAL
Dimensions	25.4 × 30.5 × 12.7 cm H × W × D	10 × 12 × 5 in H × W × D
Weight	5 kg (approximate)	11 lbs (approximate)

Table 1-4
GUIDANCE AND MANUFACTURER'S DECLARATION - EMISSIONS

The AeroNOx is intended for use in the electromagnetic environment specified below. The customer or user of the AeroNOx should ensure that it is used in such an environment.		
EMISSIONS TEST	**COMPLIANCE**	**ELECTROMACNETIC ENVIRONMENT - GUIDANCE**
RF Emissions CISPR 11	Group 1	The AeroNOx uses RF energy only for its internal function. Therefore, its RF emissions are very low and are not likely to cause any interference in nearby electronic equipment.
RF Emissions CISPR 11	Class B	The AeroNOx is suitable for use in all establishments, including domestic, and those directly connected to the public low-voltage power supply network that supplies buildings used for domestic purposes.
Harmonics IEC 61000-3-2	Class A	
Flicker IEC 61000-3-3	Complies	

Table 1-5
GUIDANCE AND MANUFACTURER'S DECLARATION - IMMUNITY

The AeroNOx is intended for use in the electromagnetic environment specified below. The customer or user of the AeroNOx should ensure that it is used in such an environment.			
IMMUNITY TEST	**IEC 60601 TEST LEVEL**	**COMPLIANCE LEVEL**	**ELECTROMAGNETIC ENVIRONMENT - GUIDANCE**
ESD IEC 61000-4-2	± 6 kV Contact ± 8 kV Air	± 6 kV Contact ± 8 kV Air	Floors should be wood, concrete, or ceramic tile. If floors are synthetic, the r/h should be at least 30%.
EFT IEC 61000-4-4	± 2 kV Mains ± 1 kV I/Os	± 2 kV Mains ± 1 kV I/Os	Mains power quality should be that of a typical commercial or hospital environment.
Surge IEC 61000-4-5	± 1 kV Differential ± 2 kV Common	± 1 kV Differential ± 2 kV Common	Mains power quality should be that of a typical commercial or hospital environment.
Voltage Dips/Dropout IEC 61000-4-11	> 95% Dip for 0.5 Cycle 60% Dip for 5 Cycles 30% Dip for 25 Cycles > 95% Dip for 5 Seconds	> 95% Dip for 0.5 Cycle 60% Dip for 5 Cycles 30% Dip for 25 Cycles During the 5 Second event, the AeroNOx powers off, but self-recovers.	Mains power quality should be that of a typical commercial or hospital environment. If the user of the AeroNOx requires continued operation during power mains interruption, it is recommended that the AeroNOx be powered from an uninterruptible power supply or battery.
Power Frequency 50/60 Hz Magnetic Field IEC 61000-4-8	3 A/m	30 A/m	Power Frequency magnetic fields should be that of a typical commercial or hospital environment.

All Equipment and Systems

Table 1-6
GUIDANCE AND MANUFACTURER'S DECLARATION - IMMUNITY

The AeroNOx is intended for use in the electromagnetic environment specified below. The customer or user of the AeroNOx should ensure that it is used in such an environment.			
IMMUNITY TEST	**IEC 60601 TEST LEVEL**	**COMPLIANCE LEVEL**	**ELECTROMAGNETIC ENVIRONMENT - GUIDANCE**
			Portable and mobile communications equipment should be separated from the AeroNOx by no less than the distances calculated/listed below:
Conducted RF IEC 61000-4-6	3 Vrms 150 kHz to 80 MHz	(V1) Vrms	D=(3.5/V1)(Sqrt P)
Radiated RF IEC 61000-4-3	3 V/m 80 MHz to 2.5 GHz	(E1) V/m	D=(3.5/E1)(Sqrt P) 80 to 800 MHz D=(7/E1)(Sqrt P) 800 MHz to 2.5 GHz Where P is the max power in watts and D is the recommended separation distance in meters. Field strengths from fixed transmitters, as determined by an electromatic site survey, should be less than the compliance levels (V1 and E1). Interference may occur in the vicinity of equipment containing a transmitter.

Equipment and Systems that are NOT Life-Supporting

Table 1-7
RECOMMENDED SEPARATION DISTANCES BETWEEN PORTABLE AND MOBILE RF COMMUNICATIONS EQUIPMENT AND THE AERONOX

The AeroNOx is intended for use in the electromagnetic environment in which radiated disturbances are controlled. The customer or user of the AeroNOx can help prevent electromagnetic interference by maintaining a minimum distance between portable and mobile RF Communications Equipment and the AeroNOx as recommended below, according to the maximum output power of the communications equipment.

MAX OUTPUT POWER (WATTS)	SEPARATION (m) 150 kHz to 80 MHz D=(3.5/V1)(Sqrt P)	SEPARATION (m) 80 to 800 MHz D=(3.5/E1)(Sqrt P)	SEPARATION (m) 800 MHz to 2.5 GHz D=(7/E1)(Sqrt P)
0.01	0.11667	0.11667	0.23333
0.1	0.36894	0.36894	0.73785
1	1.1667	1.1667	2.3333
10	3.6894	3.6894	7.3785
100	11.667	11.667	23.333

Equipment and Systems that are NOT Life-Supporting

SECTION 2

THEORY OF OPERATION

THEORY OF OPERATION

INTRODUCTION

SECTION ORGANIZATION

This section of the manual contains a general description of the instrument functions followed by a detailed description of each major circuit. A basic block diagram and the schematic diagrams are located in the "Diagrams" section of the manual. They are used to indicate circuit components, interconnections between circuitry parts, and interrelationships with the front panel controls. Refer to these diagrams for a better understanding of the text material.

INTEGRATED CIRCUIT DESCRIPTIONS

DIGITAL LOGIC CONVENTIONS

Many functions in this instrument are performed by digital logic circuits. Logic symbols and terminology are used to represent the functions and operation of the logic circuits. Most functions are described using the positive logic convention, where the more positive of two levels is referred to as the TRUE (or 1) state or HI state, and the more negative level referred to as the FALSE (or 0) state or LO state. The switching threshold between a HI or LO state varies between specific devices, therefore the manufacturer's data book should be referred to for specific device characteristics.

LINEAR DEVICES

Waveforms, voltage measurements, and simplified diagrams are used to describe the operation of linear devices.

GENERAL DESCRIPTION

NOTE: When reading this general circuit description, refer to the "Diagrams" section of this manual for further information.

GENERAL

The AeroNOx is a microprocessor based battery operated instrument designed to continuously monitor and display concentration levels of Nitric Oxide (NO), Nitrogen Dioxide (NO_2), and Oxygen (O_2) while delivering and displaying the flow rate of Nitric Oxide.

Data from the NO and NO_2 sensors is acquired, converted to parts per million (ppm), and displayed on a back-lit liquid crystal display (LCD). Data from the O_2 sensor is acquired, converted to percent concentration, and displayed on a light emitting diode (LED) panel meter. Data from the mass flow meter is acquired, converted to liters per minute flow, and displayed on an LED panel meter.

Levels of NO_2 and NO are continuously compared to the alarm settings on the front panel thumbwheel switches and the appropriate aural and visual alarms are activated. Alarm functions are not provided for the O_2.

ANALYSIS SYSTEM

Gas for analysis is drawn into the machine through the “Analysis Sample Inlet”. From here, it passes through a needle valve, which is used in conjunction with adjustments for the pump, to set the sample flow rate. A differential pressure transducer located in this line, between the pump and the needle valve, monitors the line attached to the “Analysis Sample Inlet” for obstructions. If obstructions are detected, the pressure transducer signal is used to shut off the pump to prevent foreign material being drawn into the sample system. As the gas exits the pump, it flows through a specially designed manifold where it passes past the oxygen, nitrogen dioxide, and nitric oxide sensors before being exhausted to room air. Signals from the nitrogen dioxide and nitric oxide sensors are sent to the microprocessor for display on the LCD display on the front of the instrument. Signals from the oxygen sensor are sent directly to the LED oxygen display.

DELIVERY SYSTEM

The delivery system in the AeroNOx consists of the following. Nitric oxide is supplied to the ‘NITRIC OXIDE HIGH PRESS. INLET’ connector, which feeds into the manual flow control valve in the instrument. This valve controls the delivery rate of the nitric oxide and is operated by the plastic knob on the front panel of the instrument. From the valve, the nitric oxide flows through a Brooks Model 5700 Mass Flow Meter. Following this are two electric solenoid valves. The first in the series opens and closes with the operation of the power switch, and its function is to ensure that no gas can flow if the power switch is turned off. A second valve, in series with the first, activates for about 1 second when the power switch is turned on. This valve diverts the flow of nitric oxide to room air for 1 second to release the pressure built up by the gas stored in the mass flow meter. This minimizes the chance of a bolus of gas being administered to the patient. It then switches to pass the gas through to the “Nitric Oxide Delivery Outlet”. The microprocessor in the instrument controls the operation of the solenoid valves.

DETAILED DESCRIPTION

GENERAL FEATURES AND OPERATION

MICROPROCESSOR

The AeroNOx is designed around the Motorola MC68HC711E9 microprocessor operating with a clock frequency of 8 MHz. The microprocessor and associated software is responsible for the NO and NO_2 analysis operations and the delivery of NO. Most of the functions are described in the following pages.

INITIAL STARTUP

The AeroNOx is turned on by pressing in the power switch on the front panel. Activating this switch awakens the microprocessor from its “sleep” mode. A battery voltage and a Read only Memory (ROM) check are performed. If all is well, the microprocessor (U1) activates the LCD display with the message “AERONOX VX.X” showing for about 4 seconds, then reverting to show the concentrations of NO and NO_2. Pin 46 of U1 (U1-46) of the microprocessor goes HI at this time. This signal is fed to the power supply circuit board, enabling transistor Q4, which now pulls U3-2 low. This now takes the regulator U3 out of “shutdown”, bringing the main +5 volt and +12 volt power supplies online. At this point, the instrument is completely powered up and functioning, the O_2 and flow displays are on, and the sample pump has started and is running.

When the main power switch on the front panel is “off”, portions of the instrument are still powered up but the microprocessor is put into a “sleep” mode. Power is still applied to it and also to integrated circuits U2, U3, U4, U5, U6, U7, U8, U9, U10, U11, U12, U15, U20, U21, U22, U23, and U24 on the main circuit board. U5 and U6 are in a power down mode with very small current consumption when the instrument is off. Power is required by U8 and U15 when the unit is off, in order to maintain a bias voltage of -300 mv on the NO sensor. If this bias is lost, several hours are required before the NO sensor can be used to measure gas. More information on the sensors is provided later in this manual. Maintaining the bias on the NO sensor means the instrument is ready for use immediately upon powering up. The NO_2 sensor does not require this constant bias when the unit is off; instead, a set of contacts on the power switch close when the switch is turned off, placing a short circuit across the SENSE and REFERENCE electrodes of the cell. This keeps this cell in a ready to use condition.

On the power supply board, U3, U5, and U6 remain powered, although U3 draws little current in its “shutdown” condition. U3 and U5 are powered directly by the battery. U6 is powered from U5.

FRONT PANEL

The front panel contains four displays: two LCD displays for NO and NO_2, two LED displays for O_2 and flow. Thumbwheel switches located on the front panel allow setting of the Hi and Low concentration alarm points for NO and the Hi concentration alarm point for NO_2. The power, LCD back-light, zero and alarm silence switches, and the LED indicators for NO, NO_2, and “Check Sample Line” are also located here. The manual flow control knob is located toward the lower right side of the front panel. The printed circuit boards mount on the back side of the front panel.

Table 2-1 summarizes the front panel push button switch functions and corresponding display messages.

Table 2-1 SWITCH FUNCTIONS AND ASSOCIATED MESSAGES

SWITCH	FUNCTION	MESSAGE
ALARM SILENCE	Silences audible alarm for 1 minute	ALARM SILENCE
ZERO	Stores ‘zero’ baseline value for selected sensor in memory if held for > 5 seconds	ZERO NO or ZERO NO2, followed by DONE! after 5 seconds
POWER	Powers system up or down	AERONOX VX.X on power up “B” when on battery “Plug character” when on AC
LITE	Activates the LCD backlight when depressed	No message displayed for this function
ALARM SILENCE BOTH SIMULTANEOUSLY	Displays state of safety system Changes state of safety if held for > 5 seconds	SAFETY ON or SAFETY OFF

BATTERY, CHARGER, AND BATTERY MONITOR

The software in the AeroNOx monitors the condition of battery charge and displays it on the LCD display. In addition, it also determines if there is sufficient power to correctly operate the instrument.

The battery pack used in the AeroNOx is a sealed lead-acid type rated at 6 V, 4.2 AH (20 hr) with a 2-amp resettable fuse in series with the positive lead. A two pin Molex type connector on the battery pack mates with the battery cable of the instrument.

The AeroNOx was designed to be charged and operated with a medical grade power supply, International Biomedical part number 293-0040. Charging circuitry for the battery is provided on the power supply board by D1, U1, and D2. D1 provides polarity protection in the event an unapproved external power source is attached. VSTR1 and TZ1 provide transient and over-voltage protection. R1 and R2 set the output voltage of the LM350T (U1) to about 7.7 volts, which results in about 7.1 volts available to charge the battery.

During operation, the battery level is monitored, as well as the external power input. If the AeroNOx is being externally powered, a symbol representing a 2-prong power plug is displayed in the left-most position of the LCD display. When operating from the internal battery only, this character is replaced with a letter 'B'. This 'B' also provides a visual indication of battery reserve. A fully charged battery will be indicated by a filled in 'B', which will gradually empty to become an empty outline of a 'B' when the battery is low. R34 and R36 on the main circuit board form a voltage divider which is connected to the battery. This battery reference voltage is applied to the onboard A/D converter in the microprocessor. When the battery voltage drops to 5.0 volts, the message "**LOW BATTERY**" will be displayed on the LCD display. When the battery voltage drops to 4.9 volts, the following messages are alternately sequenced continuously on the display: "**DATA INVALID**", "**CONNECT CHARGER**" and "**NITRIC OFF**". When the 5 volt power supply to the microprocessor drops to 4.6 volts, U12 on the main circuit board pulls the microprocessor into a reset condition and holds it there until the power supply rises above 4.6 volts.

ALARMS

The AeroNOx has adjustable alarm limits for the NO and NO_2 analysis system, set with the thumbwheel switches on the front panel. Alarm indications are both audible and visible. The thumbwheels are capable of settings between 00 and 99. These values are read and stored as 8 bit integers in RAM. Both Hi and Low alarms are available for the NO concentrations over the full range of 00 to 99 ppm. However, the NO_2 only has a Hi alarm limit. Additionally, even though the thumbwheel has a range of 00 to 99, the maximum setting interpreted by the software is 12 ppm. Any thumbwheel setting of the NO_2 greater than 12 will be interpreted as 12 ppm.

Hi Hi alarms have also been incorporated in the AeroNOx. These are software alarms which are at 5 ppm above the Hi NO thumbwheel setting and at 1 ppm above the Hi NO_2 thumbwheel setting. When these alarm settings are exceeded, the flow of nitric oxide gas is interrupted until the readings drop below these Hi Hi alarm limits. The maximum values allowed in software are 100 ppm for NO and 12 ppm for NO_2.

ERROR AND WARNING MESSAGES

The following table, Table 2-2, summarizes the various messages and warnings, which may be displayed by the AeroNOx.

Table 2-2 ERROR AND WARNING MESSAGES

MESSAGE	DESCRIPTION
B	Instrument is running on battery power. Relative charge level of battery is indicated by level that the **B** is filled to.
"plug graphic"	Special plug graphic character that indicates that the External Power Supply is connected and plugged in.
LOW BATTERY	Battery voltage < minimum operating voltage
DATA INVALID CONNECT CHARGER	Indicates that the unit is no longer operational because the battery is too low.
NITRIC OFF	Indicates that the nitric oxide has been shut off.
NO ZERO FAILURE	Zero baseline calibration has been corrupted.
NO2 ZERO FAILURE	Zero baseline calibration has been corrupted.
ROM FAILURE	Data stored in read only memory has been corrupted or damaged.

ANALYSIS SYSTEM

NITRIC OXIDE AND NITROGEN DIOXIDE SENSORS

The Nitric Oxide (NO) and Nitrogen Dioxide (NO_2) sensors utilized in the AeroNOx are amperometric (also called electrochemical). They can be thought of as micro fuel cells, as they produce a measurable electric current while oxidizing or reducing traces of electroactive gases. The simplest form of sensor operating on electrochemical principles has two electrodes - SENSE and COUNTER - separated by a layer of electrolyte and connected by a low resistance external circuit. Gas diffusing into the sensor is either oxidized or reduced reacted at the surface of the SENSE electrode, causing a current to flow between the electrodes through the external circuit. The current is proportional to the concentration of gas and can be measured across a load resistor in the external circuit.

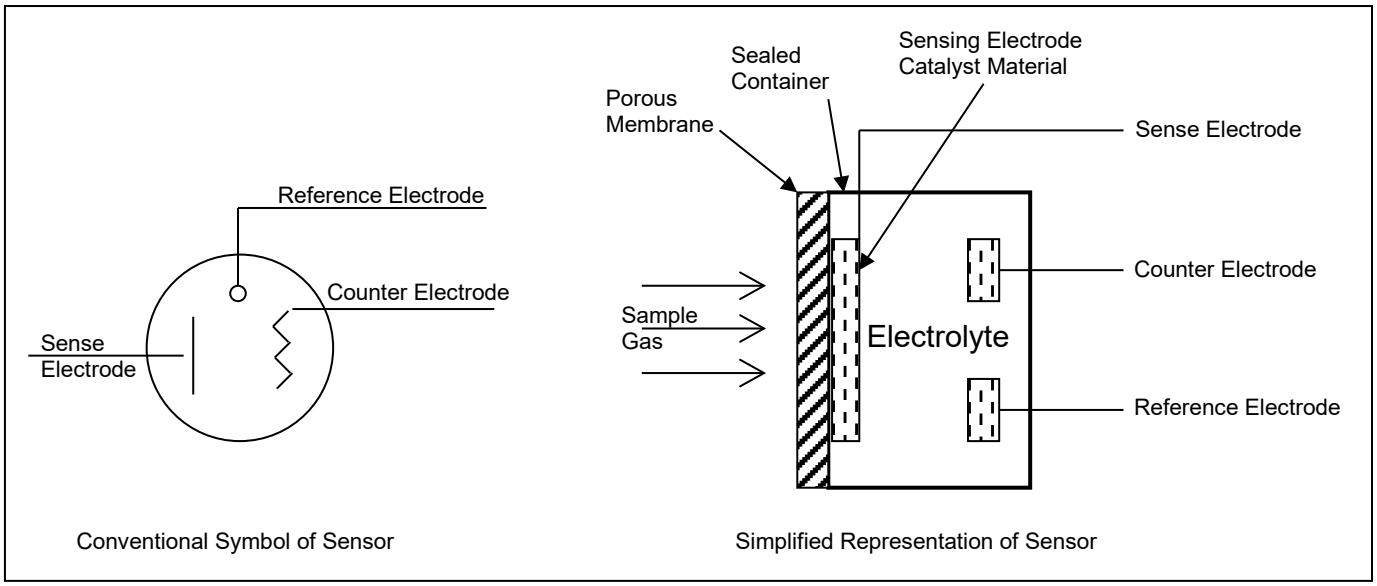

Figure 2-1 SCHEMATIC AND CONVENTIONAL REPRESENTATIONS OF ELECTROCHEMICAL GAS SENSOR

For reaction to take place, the SENSE electrode potential must be within a specific range. As the gas concentration increases so does the current flow, causing a change in the potential of the COUNTER electrode (polarization). With the electrodes connected together by a simple load resistor, the SENSE electrode potential follows that of the COUNTER. Using a third REFERENCE electrode, and an external potentiostatic operating circuit, the range of concentrations a sensor can be used to measure is much greater. With this arrangement, the SENSE electrode is held at a fixed potential relative to the REFERENCE electrode. No current is drawn from the REFERENCE electrode, so both maintain a constant potential. The COUNTER electrode is still free to polarize, but this has no effect on the SENSE electrode and so does not limit the sensor in any way. By controlling the potential of the SENSE electrode, the potentiostatic circuit also allows greater selectivity and improved response to the target gas. The same circuit is used to measure the current flow between the SENSE and COUNTER electrodes.

Gas diffusing into a cell becomes part of a reaction at the SENSE electrode: oxidation (e.g. nitric oxide) or reduction (e.g. nitrogen dioxide). Each reaction can be represented in standard chemical equation form.

Nitric Oxide (NO): $NO + 2H_2O \rightarrow HNO_3 + 3H^+ + 3e^-$ (Oxidation)

Nitrogen Dioxide (NO_2): $NO_2 + 2H^+ + 2e^- \rightarrow NO + H_2O$ (Reduction)

The COUNTER electrode acts to balance out the reaction at the SENSE electrode. If oxidation occurs at the SENSE electrode, oxygen will be reduced to form water at the COUNTER. If, however, the SENSE electrode reaction is a reduction, the COUNTER electrode reaction will be reversed (i.e. water will be oxidized). The standard equation for this electrode can be written as:

$$\tfrac{1}{2}O_2 + 2H^+ + 2e^- \rightarrow H_2O$$

This overall equation demonstrates that the fuel for the reactions is gases supplied to the sensor and the product is a gas emitted. In other words the sensor is merely a catalyst for the reaction, and no part of it is directly consumed.

TEMPERATURE EFFECTS

A small signal known as the ‘baseline’ is present on the SENSE electrode of the cell even when no reactant gas is present. The magnitude of the baseline increases exponentially with temperature, but can be ‘zeroed’ out during calibration. A large temperature change after calibration can cause a slight shifting in an instrument’s zero. Even with wide temperature variations, such a shift will normally be too small to be significant. However, if the application requires very high resolution, at very low concentrations, a zero shift could significantly alter the overall measurement.

NITROGEN DIOXIDE ANALYZER CIRCUIT

The nitrogen dioxide analyzer is operated by the microprocessor. Data from the analog to digital converter is serially transmitted to the microprocessor, which in turn displays the information on the LCD display on the front panel. Values obtained by the microprocessor are compared to the alarm settings on the front panel thumbwheels to determine if they are within acceptable range.

Figure 2-2 shows the simplified AeroNOx circuit for use with the three-electrode cell designed to measure nitrogen dioxide (NO_2). U10 operates as current to voltage converter. The output from the circuit at U10 pin 6 will be Negative with respect to common for gases which are reduced at the SENSE electrode - NO_2. The function of the COUNTER electrode is to complete the electrochemical circuit and the circuit does not fix its potential relative to the SENSE and REFERENCE electrodes. Under quiescent conditions, the cell is drawing a very small current and the COUNTER electrode will be near its rest potential. When gas is detected, the cell current rises and the COUNTER electrode polarizes with respect to the REFERENCE electrode (positive for NO_2). U9 provides an additional gain of 2 to the signal and at the same time inverts it to be a positive signal with respect to common, suitable for the 12-bit Analog to Digital (A/D) converter U6. The data from the A/D is serially transmitted to the microprocessor where it is averaged with the previous 7 readings to provide an 8-sample average, which is displayed on the LCD. Between samples from the A/D, the A/D is placed in a power down mode to conserve power. The data is sampled 8 times per second.

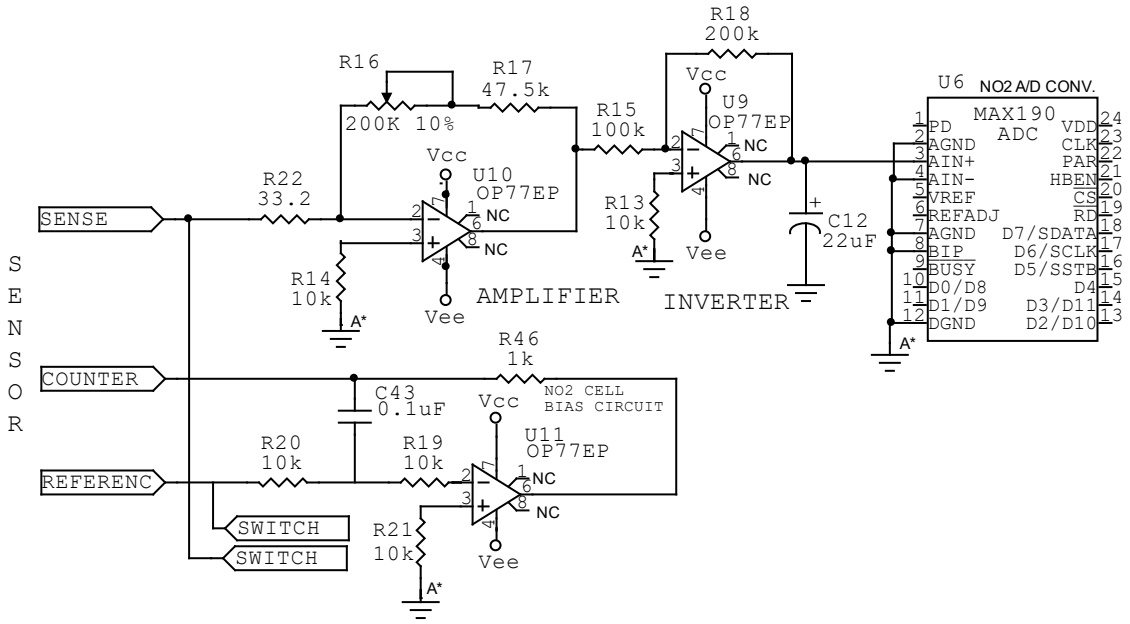

Figure 2-2 SIMPLIFIED NO_2 CIRCUITRY

To maintain the cell in a ready to work state when an instrument is switched off, the REFERENCE and SENSE electrodes must be shorted together. This is done by shorting the REFERENCE to the SENSE electrode using a ganged on/off switch.

> ***WARNING:*** **While shorted, it is important to avoid exposure to active gases or solvent vapors. Exposure to active gases and solvents in the shorted state will cause damage to the sensor cells.**

This emphasizes the importance of “flushing” the sampling system with oxygen or clean air for a few minutes before turning the instrument off after use.

NITRIC OXIDE ANALYZER CIRCUIT

The nitric oxide analyzer circuit is also a function of the microprocessor and operates in a similar fashion to the nitrogen dioxide analyzer from a software point of view.

Cells for measuring nitric oxide (NO) are designed to work with the SENSE electrode at a more positive potential than the REFERENCE electrode. This is known as 'biased' operation, and the operating circuit is shown in Figure 2-3.

The biased operation circuit is basically the same as in Figure 2-2. It is modified, however, such that the positive input of U8 is at the required potential below the circuit common, and this provides the bias voltage. As all the sensors requiring biased operation measure gases oxidized at the SENSE electrode, the output from the circuit will always be positive with respect to common.

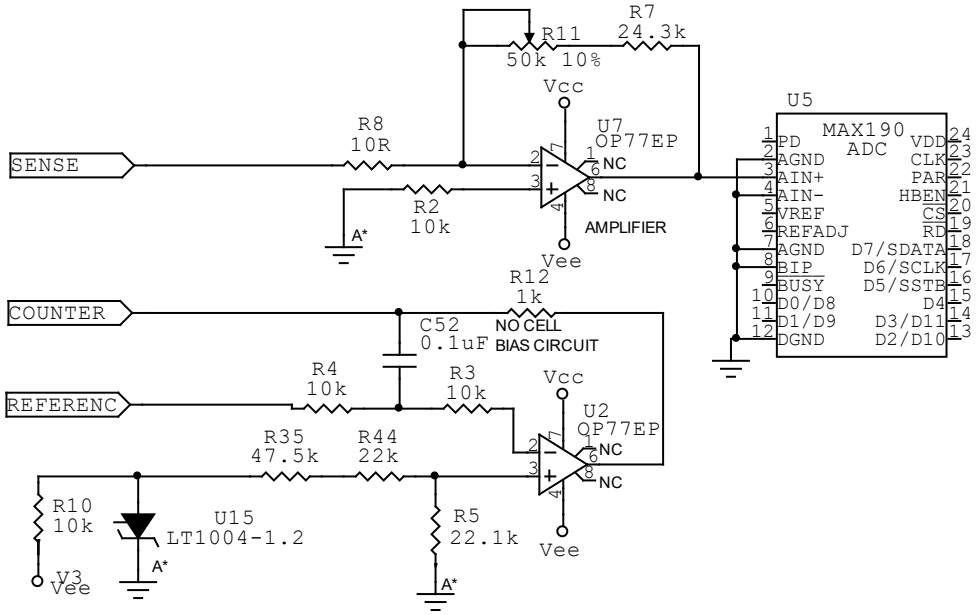

Figure 2-3 SIMPLIFIED NO CIRCUITRY

The bias voltage must be applied via U8 so as not to draw any current from the REFERENCE electrode. It cannot be applied by connecting a battery directly to the REFERENCE and SENSE electrodes. A bias potential is maintained at all times, even when an instrument is switched off to avoid very long start up times when the instrument is switched on. Applying bias to a new nitric oxide cell will produce a large, rapidly decreasing baseline, which will require two to three hours to stabilize before measurements can be made. The baseline will take about three weeks to fully stabilize. The recommended bias voltage for the cell is -300 mV, and is measured at the -300 mV test point, U8 pin 3. The data from the A/D is serially transmitted to the microprocessor where it is averaged with the previous 7 readings to provide an 8-sample average, which is displayed on the LCD. Between samples form the A/D, the A/D is placed in a power down mode to conserve power. The data is sampled 8 times per second.

The Reference and Sensing electrodes of cells requiring biased operation are not meant to have the same potential, so they are shipped without the usual shorting link. As shorting can cause permanent damage, these cells must be stored with the electrodes unshorted. For this reason the shorting switch used in the unbiased circuit is omitted in this bias circuit.

For maximum accuracy, cells should be calibrated using a gas mixture in the range where most measurements are to be made or where this is not possible, choose a mixture towards the top of the cell range. Calibration gases exceeding the range of the cell must not be used, as this may not provide an accurate calibration.

As calibration normally involves exposing the sensing face of the cell to gas for a relatively short period, a calibration gas need not contain oxygen - sufficient is supplied from ambient air, for a limited time, through the side access paths. In most cases, a five-minute exposure time is sufficient to achieve a stable calibration signal. Depending on the equipment used, however, NO_2 cells may need a longer exposure time due to surface adsorption.

PRESSURE EFFECTS

Cells will give a transient response when exposed to sudden changes in pressure in the presence of a measured gas; however the peak signal decays in only a few seconds.

TEMPERATURE DEPENDENCE

Both the span signal and the baseline (zero gas current) are affected by temperature. The output from a cell will vary only slightly with temperature. The temperature coefficient graphs in the Appendix section of this manual show how the output of each sensor will change with gradual shifts in temperature. Rapid changes in temperature will create a transient response, which will die away after 20 - 30 seconds. The graphs show the typical variation in span output with temperature for cells calibrated at 20° C to a reading of 100% from a suitable test gas.

HUMIDITY EFFECTS

Toxic gas cells use aqueous electrolytes, which, in conjunction with the porous diffusion barrier, permit water vapor to be absorbed into the electrolyte under conditions of high water vapor pressure, and allow the electrolyte to dry out at very low ambient water vapor pressure. Normally, provided conditions are non-condensing, the cell performance is relatively unaffected by humidity. However, some sensors will show a transient response when rapid changes in humidity occur. This should die away after about 20 - 30 seconds.

Continuous operation is possible between 15% and 90% RH over the full operating temperature range without affecting sensor life or performance as, under these conditions, the electrolyte will reach an equilibrium with the external water vapor pressure. It is possible to operate outside these conditions, but water transfer may occur and must be taken into consideration.

HIGH HUMIDITY, HIGH TEMPERATURE

Water will slowly diffuse in under continuous operation at high temperatures and 90 - 100% RH. If water uptake exceeds the free space available, then the sensor becomes prone to leakage - increasingly so as more and more water is taken up by the sensor. Lowering the humidity before leakage occurs will gradually restore the sensor to its original condition and no permanent harm will result from this exposure.

If a sensor is being affected by condensation, drying it with a soft tissue will restore normal operation. Do not heat sensors above 40° C to dry them out.

LOW HUMIDITY, HIGH TEMPERATURE

In continuous operation at 0 - 15% RH, water will diffuse out, only becoming a problem when the volume of electrolyte has decreased by more than 40%. At this point, the gas sensitivity of the sensor will be affected and the housing and seals may be attacked by the very concentrated electrolyte. Exposure to a RH above 15% will begin to restore the water balance, provided a sensor is not left in this condition long enough for a reduction in the electrolyte to take place. A medium sensitivity cell can operate for around six to seven weeks at 100% RH and 40° C (continuous) and two to three weeks at 0% RH (continuous). In general, low sensitivity cells will have slow water transfer rates, whereas high sensitivity cells will have higher water transfer rates, and should be operated for shorter periods of time in these conditions. The cells used in the AeroNOx are towards the higher sensitivity end of the range.

CELL HANDLING

Toxic gas cells have a rugged design and are relatively insensitive to mishandling. Following these few simple guidelines will ensure correct operation in service:

- Do not subject the cells to any pressure when clamping or handling.
- Do not remove or puncture the protective mesh or the underside slipcover over the capillary region.
- The cell contains a small volume of strong mineral acid. *In the unlikely event of a leak, avoid contact with skin, eyes, and clothing. If exposed, rinse contaminated parts thoroughly with water and consult a physician.*
- Do not use solvent based glue directly on or near the cell as the solvent will cause crazing of the plastic and damage to the electrodes can result from high concentrations of solvent vapors.
- Do not store or assemble in areas that contain solvent vapors, including aerosols used in the environment such as air-freshener, wax polish, window cleaner, and all organic solvents. Formaldehyde, for example, is known to temporarily inhibit the operation of nitric oxide sensors. Other solvents are known to create false high baselines and, in some cases, may damage the electrodes.
- Sensors in which the PTFE membrane is clearly visible must not be stacked on top of each other as the capillary region is particularly susceptible to damage from PCB pins.
- Do not solder connections directly on to gold PCB pins of a cell.
- Do not bend the pin connections.

Individual data sheets include tables of the cross-sensitivity of each cell to gases other than their target gas. These tables show the typical response of a sensor to a given concentration of test gas, normally around the TLV level. All values were obtained experimentally at City Technology. Depending on the nature of the reaction each gas has with the sensor, the effect can either decrease the signal (negative cross-sensitivity) or increase the signal (positive cross-sensitivity). For safety concerns, a negative cross-sensitivity may present more problems than a positive one, as this will serve to diminish the response to the target gas and so inhibit any alarm. In such cases, it may be necessary to monitor both gases. When a sensor shows cross-sensitivity to a particular gas, whether or not this is a threat to accuracy in an application depends on the degree of accuracy required and the relative concentration of this gas relative to the target gas. For instance where ± 10% accuracy is needed, any gas likely to be present in a high enough concentration to cause a 10% signal should be monitored separately.

OXYGEN ANALYZER CIRCUIT

The oxygen analyzer circuit operates as a stand-alone circuit. Only the power to the circuit is controlled by the microprocessor. No alarm functions are incorporated in it.

The oxygen cell used in the AeroNOx is of the self-powered, diffusion limited, metal-air battery type comprised of an anode, an electrolyte and an air cathode as shown below. At the cathode, oxygen is reduced to hydroxyl ions according to the equation:

$$O_2 + 2H_2O + 4e^- \rightarrow 4OH^-$$

The hydroxyl ions in turn oxidize the metal anode as follows:

$$2Pb + 4OH^- \rightarrow 2PbO + 2H_2O + 4e^-$$

Overall the cell reaction may be represented as:

$$2Pb + O_2 \rightarrow 2PbO$$

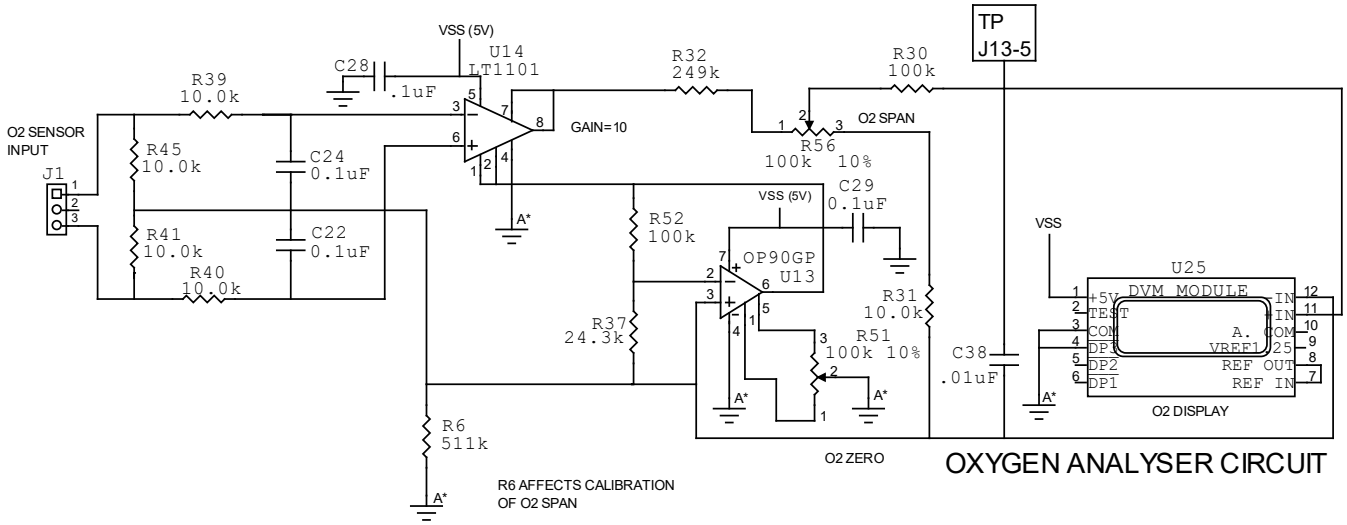

Figure 2-4 SIMPLIFIED OXYGEN CIRCUITRY

Oxygen cells are current generators, and the current is proportional to the rate of oxygen consumption. This current can be measured by connecting a resistor across the output terminals to produce a voltage signal. If the passage of oxygen into the sensor is purely diffusion limited, this signal is a measure of oxygen concentration.

The oxygen cells used in the AeroNOx have a low value resistor built in to them and generate a nominal 13 mV signal at 21% oxygen. The cell outputs a voltage of 0 mV to approximately 50 mv for a range of 0% to 100% oxygen. The amplifier circuit in the AeroNOx oxygen circuit provides a load of greater than 20 kOhm to the sensor in parallel with the load resistor on the sensor. As a general rule, the higher the load resistance the greater the response time of the sensors. The sensor signal is amplified by a fixed gain of 10 by U14. R31, R32, and R56 provide a load to U14. R56 is the panel mounted calibration / span potentiometer used to calibrate the oxygen display. U13 and R51 provide the 'zero' calibration for the circuit. The signal on the wiper of R56 is applied to the 200 mV full-scale display module U25. 100 mV to U25 pin 11 corresponds to 100% oxygen. The range in the calibration resistor R56 is sufficient to cover the variation in output current between sensors, as well as changes caused by temperature variations and an allowance for long term drift. Cell output drops as the cell ages.

LINEARITY

The signal from an Oxygen cell is slightly non-linear and follows the law:

$$S = K \ln[1/(1-C)]$$

N. B. If the sensor is calibrated in dry air to read 20.9% (S=20.9, C=0.209), then K=89.14. The maximum error then occurs at about 10% Oxygen when the cell output is approximately 0.5% lower than a linear response would indicate. In most circumstances this error is insignificant.

CARRIER GAS EFFECTS

For most purposes, the Oxygen cell may simply be calibrated in ambient air. In the presence of high concentrations of gases other than air, however, the effect of the carrier gas (i.e. mixture less oxygen) on the output signal becomes important. The rate of diffusion of oxygen, and hence the signal from a cell, is proportional to the molecular weight of the carrier gas (Graham's Law).

Dry air may be considered to consist of 20.95% oxygen in nitrogen, which has a molecular weight of 28 g/mole. When using the sensor with a different carrier gas, with a significantly different molecular weight from nitrogen, the signal from the cell will be affected.

CROSS SENSITIVITY

Toxic gases at TLV levels will have no cross-sensitivity effect on the Oxygen cell. At very high levels (i.e. percent levels), highly oxidizing gases (e.g. ozone and chlorine) will interfere to the extent of their oxygen equivalent, but most other commonly occurring gases will have no effect.

For example:

Methane 100%	0
Hydrocarbons 100%	0
Hydrogen 100%	< -2%
Carbon monoxide 20%	< -0.5%

Acid gases such as CO_2 and SO_2 will be slightly absorbed by the electrolyte and tend to increase the flux of oxygen to the electrode. This gives an enhanced oxygen signal of about 0.3% of signal per 1% CO_2. Oxygen cells are not suitable for continuous operation in concentrations of CO_2 above 25%.

NOTE: Sensors should not be subjected to prolonged exposure to highly corrosive atmospheres as this will cause premature failure.

TEMPERATURE / PRESSURE DEPENDENCE

The output of an Oxygen cell varies slightly with gradual changes in temperature, but when exposed to a step change in temperature, these sensors exhibit a transient response - a signal decrease for a sharp rise in temperature and a signal increase for a sharp drop in temperature. The temperature transient will diminish in about 20 seconds.

Oxygen cells will give a transient response to step changes in pressure - a signal increase for increased pressure and a signal decrease for decreased pressure. This transient will disappear after about 8 - 10 seconds. Mechanical shock may also cause the sensors to give a temporary increase in signal.

OXYGEN CONCENTRATION VS. HUMIDITY

Prolonged periods of operation in either extremely high, or extremely low, relative humidity will have little effect on the sensors. Changes in relative humidity of a gas sample will affect the volume % concentration of oxygen, and therefore the output of a cell due to the dilution effect caused by increasing water vapor pressure. The current given by Oxygen cell is only affected in as much as the concentration of oxygen varies.

In conditions where liquid condensation may occur, liquids may form in the region of the gas access hole, which will restrict the flow of gas to the sensor, resulting in a low signal. If a sensor shows signs of being affected by condensation, drying the sensor with a soft tissue may restore normal operation. Under no circumstances should the sensors be heated above 40° C to dry them.

OXYGEN CELL HANDLING PRECAUTIONS

Oxygen cells are relatively insensitive to mishandling and following the simple guidelines given below should ensure correct operation.

- Oxygen sensors may be stored for up to six months during which time they should be kept sealed in the containers in which they are supplied in clean dry air at 0 - 20° C.
- Do not store sensors in areas containing solvent vapors, as exposure to organic solvent vapors may inhibit their performance.
- Oxygen sensors must not be subjected to any pressure when handling or clamping.
- At the end of its life, please dispose of the cell properly as it contains a small amount of lead.

SAMPLING SYSTEM AND SAMPLING SYSTEM MONITOR

Gas is drawn in through the ‘Analysis Sample Inlet’ by the sampling pump. Inline with the suction side of the pump is a precision needle valve and a differential pressure sensor. The needle valve is used in conjunction with the pump speed adjust (R17) to set the sampling flow rate of the analyzer to 150 cc per minute ± 15%. The pressure sensor is used to detect obstruction of the sample inlet port.

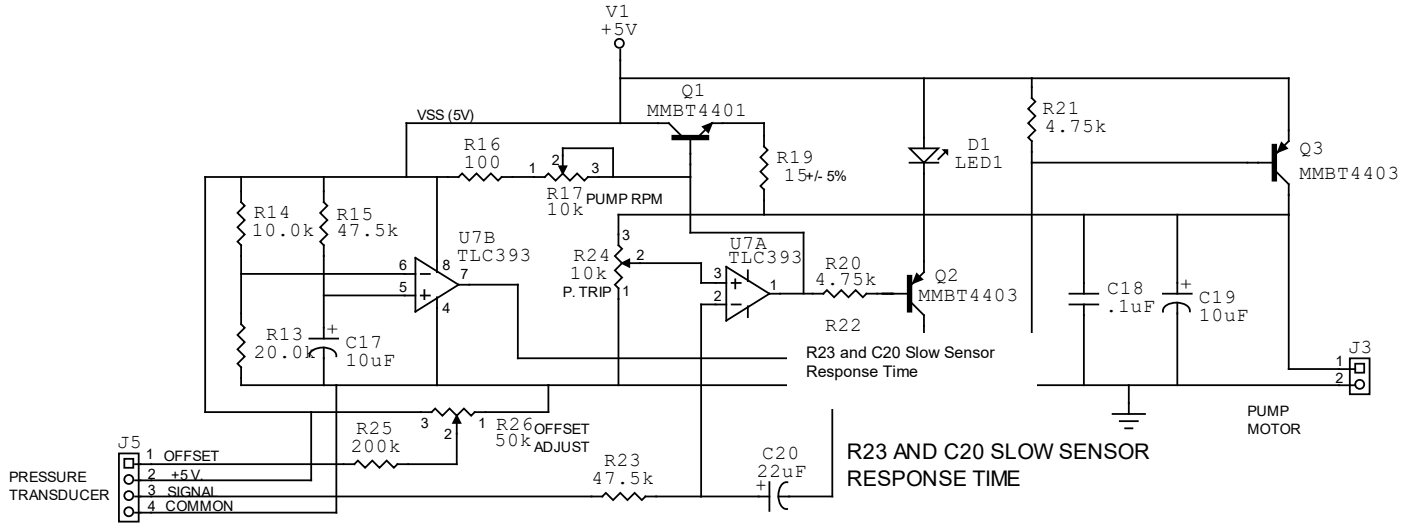

R17 SETS PUMP SPEED. IF POT IS TURNED PAST THE POINT WHERE SPEED INCREASES, PUMP WILL NOT SHUT OFF.

R24 SETS PUMP CUT-OFF POINT WHEN OPERATING WITH A PRESSURE TRANSDUCER

NOTE: R25, R26, OFFSET ADJUST, MAY NOT BE REQUIRED WITH ALL PRESSURE TRANSDUCERS

NOTE: ALL RESISTORS ARE +/- 1% TOLERANCE UNLESS OTHERWISE INDICATED.

Figure 2-5 PUMP CONTROL CIRCUIT

The sample system pump is controlled by the pump control circuit. When instrument power is turned on, a +5 volt is applied to the circuit. R13 and R14 establish a reference level on the inverting input of U7B-6. R15 and C17 form an RC time constant of about 0.5 seconds. This delays the voltage rise on U7B-5. While pin U7B-5 is below the reference level on U7B-6, the output of the comparator (U7B-7) is held low, which in turn pulls the base of transistor Q3 low, turning on transistor Q3. Q3 acts as a series pass element, delivering 5 volts to the pump motor for a 0.5 second period. This ensures that the pump positively starts. When R15 and C17 time out, Q3 turns off. The pump continues to run at this time because Q1 is now delivering power to the pump through a circuit in parallel with Q3. The pump speed at this time is now slower, as the pump is now running on approximately 2.5 volts. R17 now controls the pump speed by varying the drive to the base of Q1. The pump continues to run as long as the output of comparator U7A remains high. U7A-1 remains high as long as the voltage level from the pressure transducer remains below the reference level set by R24, which is derived from the voltage delivered to the pump. If the sample line becomes obstructed, the voltage signal from the pressure transducer rises. When the voltage from the pressure transducer exceeds the reference on U7A-3, the output, U7A-1 goes low. This in turn pulls the base of Q1 low, turning it and the pump off. Simultaneously, Q2 is now turned on, which lights the “Check Sample Line” LED on the front of the instrument. Offset Adjust, R26, which is set to provide 2 volts of offset to the pressure transducer, ensures that a small voltage is present on the output of the pressure transducer even when the transducer is recording no pressure. This small voltage appearing on U7A-2 will ensure that the output of U7A remains latched low once the circuit has tripped. Interrupting power to the circuit for a period of 5 seconds will allow the circuit to reset itself. R23 and C20 provide smoothing of the signal from the pressure transducer and minimize false tripping of the circuit.

DELIVERY SYSTEM

The delivery system in the AeroNOx consists of the following. Nitric oxide is supplied to the 'NITRIC OXIDE HIGH PRESS. INLET' connector, which feeds into the manual flow control valve in the instrument. This valve controls the delivery rate of the nitric oxide and is operated by the plastic knob on the front panel of the instrument. From the valve, the nitric oxide flows through a Brooks Model 5700 Mass Flow Meter. Following this are two electric solenoid valves. The first in the series opens and closes with the operation of the power switch, and its function is to ensure that no gas can flow if the power switch is turned off. A second valve, in series with the first, activates for about 1 second when the power switch is turned on. This valve diverts the flow of nitric oxide to room air for 1 second to release the pressure built up by the gas stored in the mass flow meter. This minimizes the chance of a bolus of gas being administered to the patient. It then switches to pass the gas through to the "Nitric Oxide Delivery Outlet". The microprocessor in the instrument controls the operation of the solenoid valves.

ALARMS

Audible and visual alarms controlled by the microprocessor are present in the instrument. Setting of the alarms is accomplished by the thumbwheels on the front panel. Binary coded decimal (BCD) information from the thumbwheels is scanned by the microprocessor and used by the software to determine alarm conditions.

During alarm conditions where the analyzer section has determined that the analyzed concentration of NO is greater than 5 ppm above the NO Hi Alarm setting or greater than 100 ppm, or when the analyzed concentration of NO_2 is greater than 1 ppm above the NO_2 Hi Alarm setting or greater than 12 ppm, the microprocessor will cause the solenoid valves to shut off flow of nitric oxide. When conditions return within the above specifications, the valves will sequence and restart the flow.

MASS FLOW METER CIRCUIT

The mass flow meter (MFM) circuit operates independently of the microprocessor, with the exception being the power to the circuit. The Brooks mass flow meter, powered by 12 volts D. C., delivers a 0 - 5 volt signal proportional to the 0 - 2 liter per minute flow capability of the device. This signal is scaled by R48 to match the 0 - 200 mV input of the LED panel meter (U26).

Zero adjustment of the mass flow meter is accomplished by accessing the Zero Adjustment pot located behind the hole in the top of the device.

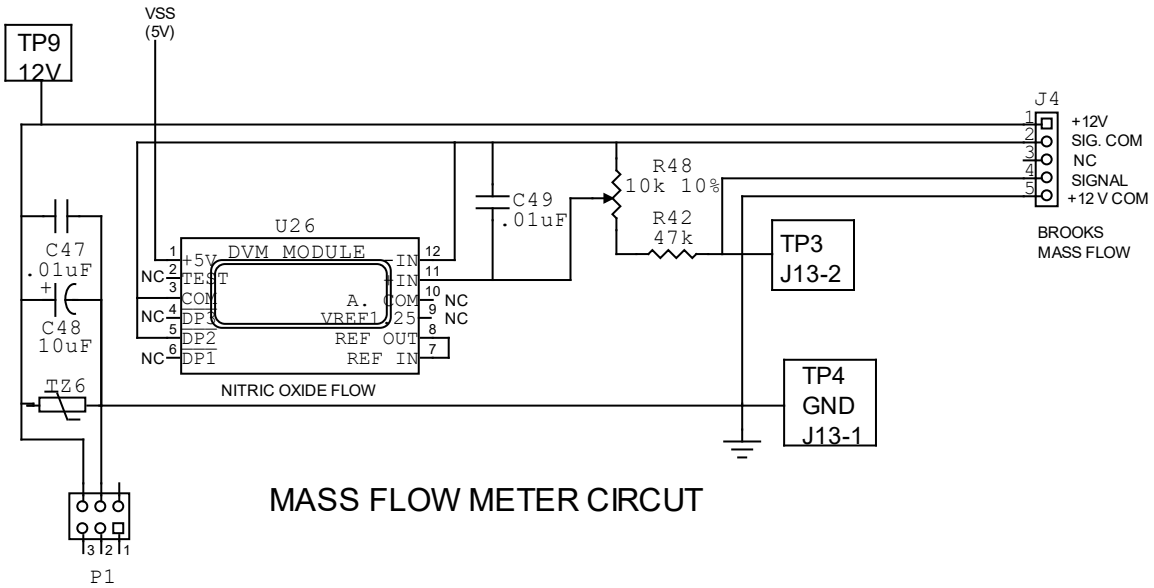

Figure 2-6 SIMPLIFIED MASS FLOW METER CIRCUIT

SECTION 3

ADJUSTMENT PROCEDURE

ADJUSTMENT PROCEDURE

INTRODUCTION

PURPOSE

The “Adjustment Procedure” is a set of instructions intended to return the instrument to conformance with the published specifications. Adjustment described in this section should only be performed after thoroughly checking the operation of the instrument and confirming that a definite need to adjust the instrument exists.

OUTLINE

Most of the adjustments in the AeroNOx can be performed independently and will not affect other sections of the instrument.

A list of front panel control settings required to prepare the instrument for adjustment is provided at the beginning of the section. Adjustment steps should be carried out in the order indicated and all steps should be completed.

MAINTENANCE AIDS AND TEST EQUIPMENT

The maintenance aids and test equipment listed in Table 3-1 will provide service personnel with the tools required to perform the adjustment procedures outlined in this section of the manual and the repair procedures in the “Maintenance” section of the manual. Equivalent tools may be substituted if their characteristics are similar.

Table 3-1 TOOLS AND EQUIPMENT

DESCRIPTION	SPECIFICATIONS	USAGE	EXAMPLE
Soldering Iron	15 - 42 watt	soldering / desoldering	Weller WTCPT Hako 936 Weller WP25
Phillips Screwdriver	#1, #2 tips	assembly / disassembly	Xcelite X101 Xcelite X102
Square Recess Screwdriver (Robertson / Scrulox)	#0, #1, #2	assembly / disassembly	Xcelite SL0 Xcelite SL1 Xcelite SL2
Diagonal Cutters		component removal / replacement	Weller 170-M Xcelite 54CG
Needle Nose Pliers		component removal / replacement	Xcelite 57CG
Blade Screwdriver	3/16” × 4”	assembly / disassembly	Xcelite R3164
Nut Drivers	¼”, 5/16”, 3/8”	assembly / disassembly	Xcelite HS8 Xcelite HS10 Xcelite HS12
Hex Socket Screwdrivers	3/32”, 7/64”, 0.035”, 3/64”	assembly / disassembly	Xcelite P19 Xcelite P764 Xcelite P23
Oscilloscope	100 MHz w/probes	test and measure	Tektronix 2235
Digital Multimeter w/Test Leads / Clip Leads		test and measure	Fluke 73

DESCRIPTION	SPECIFICATIONS	USAGE	EXAMPLE
Miscellaneous Hand Tools as Deemed Appropriate			
ESD Safe Work Surface and ESD Wrist Strap			
PLCC Extraction Tool		disassembly	OK EX5
Trimmer Adjustment Tool		adjustments	Spectrol Type 8T000 Bourns Type H91
Water Manometer	80 cmH_2O	adjustments	Fabricate as req'd
Gas Flowmeter w/Precision Valve	0 - 250 cc/min	adjustments	
Sample Line / Hydrophobic Filter and Nafion Line		adjustments	International Biomedical P/N 415-0004
Gases - NO, NO_2, O_2, N_2		adjustments	
NO/NO_2 Sensor Stimulator		adjustments	
Delivery Line and Regulator		adjustments	
Adjustable DC Power Supply	0 - 20 V @ 2 Amp	adjustments	

LIMITS AND TOLERANCES

Any limits or tolerances stated in this section of the manual are instrument specifications only if they are listed as such in the "Performance Requirements" of **SECTION 1**. Tolerances given are only applicable to the instrument being adjusted and do not account for test equipment errors. All adjustments should be performed at an ambient temperature between +20° C and +30° C after the instrument has had at least a 30-minute warm-up period.

ADJUSTMENT INTERACTION

Some adjustments affect or interact with other adjustments. These will be pointed out in the procedures.

PREPARATION FOR ADJUSTMENT

Prior to adjustment, the instrument case must be opened as described in the instructions in **SECTION 4**, "Maintenance".

At the beginning of the adjustment procedure is a list of the tools / equipment required to perform the task. Do not preset any adjustments prior to starting a procedure, unless told to do so. Only change an internal adjustment if a performance characteristic cannot be met with the original setting.

Before performing any adjustments, ensure the battery in the instrument is fully charged and the AC power supply is connected. Turn the unit on and warm it up for 30 minutes before adjusting.

PROCEDURES

INITIAL CONTROL SETTINGS

POWER	ON (depressed)	**LITE**	ON (depressed)
LOW NO ALARM	00	**HI NO ALARM**	99
HI NO2 ALARM	99		

ADJUSTING LCD DISPLAY CONTRAST

TOOLS REQUIRED: Trimmer adjusting tool

PROCEDURE:
1. Set initial control settings as above.
2. Adjust R43 for proper contrast - Clockwise to increase, Counterclockwise to decrease.
3. Procedure complete. Turn AeroNOx OFF and reassemble instrument or continue with further adjustments.

ADJUST MASS FLOW METER

ZERO MASS FLOW METER DISPLAY

TOOLS REQUIRED: Trimmer Adjusting Tool

PROCEDURE:
1. Set initial control settings as above.
2. Turn instrument ON and allow instrument to warm up for at least 30 minutes.
3. Remove the small rubber plug in the top of the Brooks Model 5700 mass flow meter.
4. Use the trimmer adjusting tool to turn the trimpot in the mass flowmeter until the display reads ‘0’.
5. Replace small rubber plug.
6. Procedure complete. Continue with further adjustments or turn the AeroNOx OFF and reassemble instrument.

CALIBRATE SPAN OF MASS FLOW METER

TOOLS REQUIRED: Trimmer Adjusting Tool
Variable DC Power Supply
Multimeter
Test Leads / Clip Leads

PROCEDURE:
1. Set initial control settings as above. Then turn the instrument OFF.
2. Adjust the output of the variable DC power supply to 5.00 volts. Measure with multimeter.
3. Disconnect the plug from J4 on the main circuit board. This is the cable that goes to the mass flow meter.
4. Connect the 5.00 volt signal from variable power supply to Pin 4 of J4 (positive) and Pin 2 of J4 (negative).
5. Turn ON the AeroNOx and allow instrument to warm-up for 30 minutes.

6. Adjust R48 with the trimmer adjustment tool until the flow meter display reads 2.00.
7. Adjust the output of the variable DC supply to 2.50 volts. Measure with multimeter.
8. Check that the flow meter display now reads 1.00.
9. Turn OFF the AeroNOx and the DC power supply.
10. Disconnect the power supply from J4 and reattach the cable to the Brooks flow meter.
11. Procedure complete. Continue with further adjustments or turn the AeroNOx OFF and reassemble instrument.

ADJUST -300 mV NO SENSOR BIAS (ONLY APPLICABLE FOR SERIAL # IV001 - IV099)

NOTE: This circuit has been modified to incorporate a fixed value precision resistor that replaces the potentiometer. This modification has been incorporated on all units serial number IV100 and higher and on any units returned for service after January 2002.

TOOLS REQUIRED: Trimmer Adjusting Tool
Multimeter
Test Leads / Clip Leads

PROCEDURE:
1. Set initial control settings as stated on page 3-4.
2. Ensure there is a fully charged battery in the AeroNOx.
3. Locate the -300 mV test points beside R35 and attach multimeter capable of measuring 300 mV to the test points.
4. Adjust R35 until the multimeter indicates 300 mV.
5. Remove test leads.
6. Procedure complete. Continue with further adjustments or turn the AeroNOx OFF and reassemble instrument.

ADJUST OXYGEN ANALYZER CIRCUIT

TOOLS REQUIRED: Trimmer Adjusting Tool
Multimeter
Test Leads / Clip Leads

PROCEDURE:
1. Set initial control settings as stated on page 3-4.
2. Ensure there is a fully charged battery in the AeroNOx.
3. Disconnect the cable from J1 on the main circuit board.
4. Place a short circuit between Pins J1-1 and J1-3.
5. Turn the instrument on.
6. Adjust R51 for a zero reading on the oxygen display.
7. Turn off instrument.
8. Remove short circuit from J1 and reconnect the cable removed in step 3.
9. Measure the voltage on J1 pins 1 and 3. It should be between 11 and 15 mV.
10. Turn the instrument on and check the reading on the LED oxygen display.
11. If the LED display does not read 20.9%, adjust R56 trimmer on the front panel until the display reads 20.9%.
12. Procedure complete. Continue with further adjustments or turn the AeroNOx OFF and reassemble instrument.

ADJUST SAMPLING SYSTEM CIRCUIT

TOOLS REQUIRED:

Trimmer Adjusting Tool	Water Manometer
Multimeter	Needle Nose Pliers
Test Leads / Clip Leads	Gas Flowmeter with Precision Valve
Sample Line with Hydrophobic Filter and Nafion Tubing	

PROCEDURE:

1. Set initial control settings as stated on page 3-4.
2. Connect the water manometer, flowmeter with valve, sample line, hydrophobic filter, and Nafion tubing as pictured in Figure 3-1.
3. Open the precision valve on the flowmeter fully to allow unrestricted flow.
4. Back off the locking nut and open the precision metering valve in the sampling system circuit fully.
5. Turn the unit on and adjust R17 (pump speed potentiometer) for a flow of about 180 to 190 cc/min.
6. Adjust the precision metering valve in the AeroNOx until flow is reduced to 172 cc/min.
7. Gradually close the precision valve on the flowmeter until the water column in the manometer rises to 50 cm in height.
8. Check for a sample flow of about 125 cc/min. Fine tuning of the R17 pot and the adjustment of the precision metering valve in the AeroNOx may be required to obtain the flows of 125 and 172 cc/min. as the two interact.
9. With a 50 cm water column, adjust R24 to the point where the pump stops when the water column is at 50 cm.
10. Repeat steps 7 through 9 until the criteria of unrestricted flow of 172 cc/min, restricted flow of 125cc/min and a cut-off point of 50 cc of water are reached.
11. Cycle power to the instrument to reset the pump circuit.
12. With the pump tripped off, but the instrument still on, adjust R26 for a voltage of 1.95 $\pm$ .05 volts between J5 pin 1 and J5 pin 4.
13. Check operation several times for consistency.
14. When satisfied with operation, tighten lock nut on precision metering valve in the AeroNOx.
15. Disconnect the AeroNOx from the test equipment.
16. Procedure complete. Continue with further adjustments or turn the AeroNOx OFF and reassemble instrument.

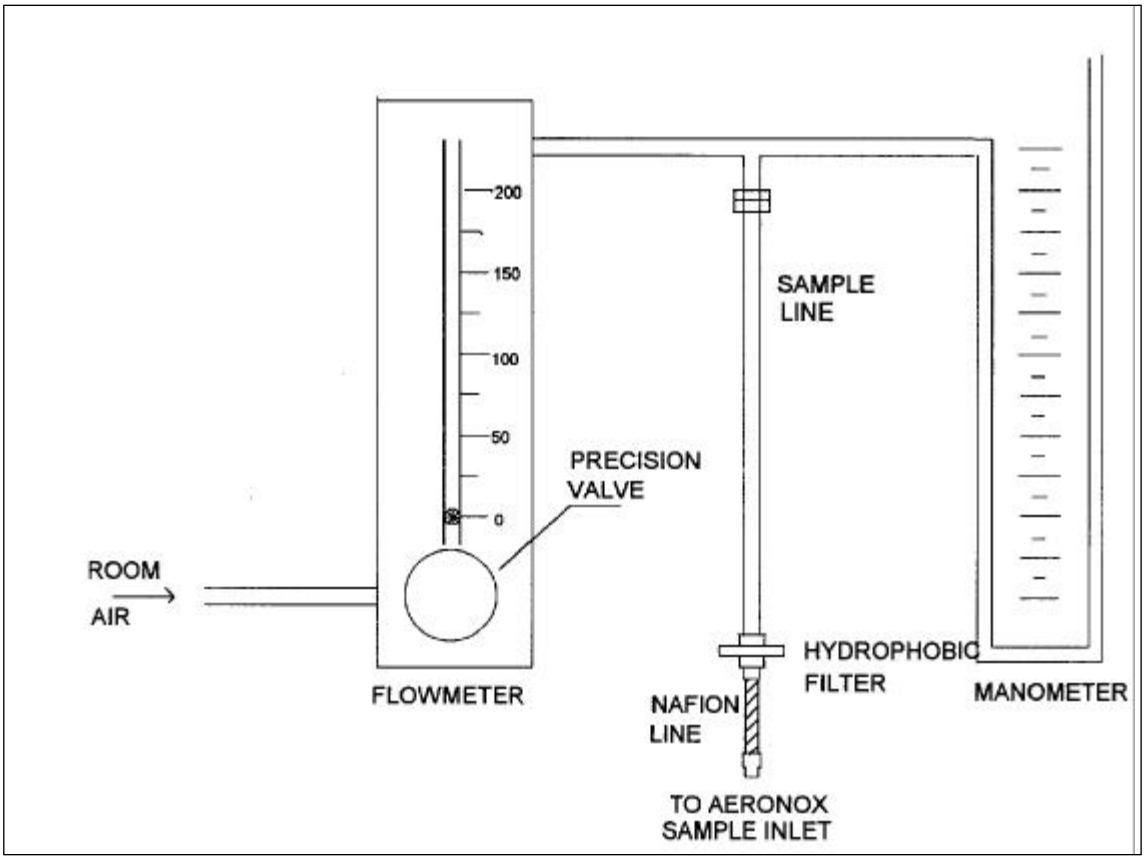

Figure 3-1 EQUIPMENT CONFIGURATION FOR SETTING SAMPLE PUMP FLOW AND CUT-OFF

SECTION 4

MAINTENANCE

MAINTENANCE

STATIC SENSITIVE COMPONENTS

<u>CAUTION</u>: ALL semiconductor components in the AeroNOx can be damaged by static discharge.

PREVENTATIVE MAINTENANCE

INTRODUCTION

Preventative maintenance consists of periodically cleaning, visually inspecting, and checking operation of the instrument. The severity of the operating environment will determine the frequency of this.

GENERAL CARE, CLEANING, AND INSPECTION

The case of the AeroNOx minimizes accumulations of dust inside the case, and the flip-up front cover protects the switches and displays of the instrument. Frequency of cleaning will depend on the environment the instrument is used in.

> ***<u>CAUTION</u>: Avoid the use of cleaners or solvents which may damage the plastic case or damage the sensors inside the case. Avoid use of alcohol or ammonia cleaners. Recommended is the use of a mild detergent and water on a dampened cloth. Avoid getting moisture or liquids inside the case or in the switches. Do not use abrasive cleaners.***

EXTERIOR
Inspect the exterior of the instrument for signs that it may have been dropped or abused. If evidence is found, thoroughly inspect the instrument and verify that it is functioning correctly. Problems or deficiencies that could cause personal injury or further damage to the instrument should be corrected or repaired immediately. Check for loose or broken control knobs and switches.

INTERIOR
To inspect the interior of the instrument, refer to the instructions in the Corrective Maintenance part of the manual for instructions for opening the case. Inspect the interior of the instrument for visibly obvious defects, such as pinched or kinked tubing and wiring, loose connectors, loose screws, overheated components, etc. Check that the cooling fan on the heatsink operates when the external power supply is attached. **<u>NOTE</u>:** The fan only runs when the battery is being charged.

To remove dust from the interior of the instrument, use low pressure air and a soft brush or a cloth dampened in a mild detergent and water solution. Cotton tipped applicators may be used to clean narrow spaces.

All switch contacts in the AeroNOx are sealed and attempting to clean them is not recommended. Switch maintenance is seldom necessary unless dirty or corrosive liquids have been spilled into them. In these cases, replacement is recommended.

POTENTIOMETERS
All potentiometers in the AeroNOx are sealed and cannot be lubricated or cleaned. The only three potentiometers which may give a problem are the three calibration adjustments on the front panel. These are trimpots and have a limited adjustment life. Problems with these will show up as erratic operation when calibrating functions. Replacement is the solution to this problem.

BATTERY
The sealed lead-acid battery pack in the instrument should not be allowed to deeply discharge as this will shorten the operation life of the battery. When the instrument is not in use for extended periods of time (more than 7 days), either the battery should be disconnected and removed, or the external power supply should be attached and the battery left on continuous charge. The disadvantage of removing the battery from the instrument is that the bias is lost to the NO cell and will result in several hours delay before the instrument can be used for measurements. Battery life is not shortened by leaving the external AC power supply connected and the battery on continuous charge. This has the added benefit of keeping the instrument ready for immediate use.

For best performance from the instrument, the battery pack should be replaced yearly.

COMPONENT CHECKS
Periodic checks of semiconductors and other components in the instrument are not recommended. The best check of components is the actual operation of the instrument.

PERIODIC ADJUSTMENTS
Check the performance or operation by performing a calibration as outlined in the “Operating Manual” and a functional check of the various features of this instrument every 1000 hours of operation, or if used infrequently, every six months. There are few adjustments in the AeroNOx and most will seldom require readjustment.

TROUBLESHOOTING

INTRODUCTION

Regular preventative maintenance should reveal most potential problems before the instrument malfunctions. If troubleshooting is required, reference to the materials in the “Theory of Operation” and the “Diagrams” section of the manual will be of assistance.

TROUBLESHOOTING AIDS

SCHEMATIC DIAGRAMS
Complete schematic diagrams are included in the “Diagrams” section of the manual. Each printed circuit board has its own schematic diagram. The printed circuit board number is associated with the number on the schematic.

Key values or test points are marked on the schematics as TP x, to assist in quickly determining the location of the fault. Experience has shown that checking these test points usually has pinpointed the majority of problems in a matter of minutes. Many of the pins on components on the schematics are also labeled to assist in troubleshooting.

COMPONENT REPLACEMENT DIAGRAMS
Component placement diagrams are included in the “Diagrams” section. These show the physical location of each component.

CIRCUIT BOARD / SUBASSEMBLY INTERCONNECTION DIAGRAM
A block diagram in the “Diagrams” section of the manual shows the interconnection of the various components in the instrument. It also shows the gas flow through the instrument for delivery and analysis.

COMPONENT IDENTIFICATION

Resistors and Capacitors
Most of the resistors and capacitors used in the AeroNOx are of the surface mount type. The capacitors have no easily identifiable markings on them to indicate their value. Refer to the component placement diagram and the schematics to assist in identifying their value. The resistors used are mostly of a ± 1% tolerance and have markings on them indicating their value. Note that the best way to confirm their integrity is by use of a digital multimeter with a low voltage ohms scale. Normally, these two components do not give many problems unless the circuit board has been subjected to severe shock or flexing. The most common mode of failure in the surface mount devices is fracture of the device.

Diodes
The cathode end of all diodes is indicated by either a band, a series of stripes, or a dot. Most diodes used in the AeroNOx also have a part number visible.

Transistors
A mix of standard transistor packages and surface mount packages are used in the AeroNOx. Part numbers are clearly visible on the standard packages and are thus easily identified. The surface mount transistors have coded identification numbers. For identification, refer to the component placement diagrams and schematics.

Multi-pin Connectors

All multi-pin connectors used are physically keyed by way of their construction to ensure proper orientation. However, make sure that the plugs are placed on the proper receptacles if they are removed for service.

TROUBLESHOOTING TECHNIQUE

The following procedures are designed to provide some simple troubleshooting possibilities to quickly determine if more extensive troubleshooting is required.

> ***CAUTION*: Before using any test equipment to make any measurements or tests on static-sensitive, voltage-sensitive, or current-sensitive components in the AeroNOx, ensure that any voltage or current supplied by the test equipment does not exceed the limits of the component tested.**

1. CHECK CONTROL SETTINGS
   Incorrect control settings can give a false indication of a problem. If in doubt as to the function or operation of a control, refer to the "Operating Instructions". The "Theory of Operation" in this manual may also assist.

2. CHECK ASSOCIATED EQUIPMENT
   Ensure that any equipment used in conjunction with the AeroNOx is properly functioning and correctly connected to the AeroNOx. Check that power cords are properly connected, that interconnecting plugs and cables are not defective, and that gas connections are correct and tight.

   > ***WARNING*: Before doing a visual check of the instrument, disconnect the power to the instrument, both the battery and the external power supply, to avoid causing extensive damage to the instrument in the event that tools etc. should slip and short components together.**

3. VISUAL CHECK
   Visually check the instrument looking for broken wire, loose connectors, damaged circuit boards, leaking or pinched plumbing and tubing, semiconductors that are loose in their sockets, switches or thumbwheels that have been dislodged or broken, and any other things that may possibly affect the operation.

4. CHECK INSTRUMENT PERFORMANCE
   Check the performance of the portion of the circuits where the problem appears to be, or check the performance of the entire machine as the problem may be only the result of a misadjustment.

5. ISOLATE THE PROBLEM TO A CIRCUIT
   Use the schematic diagrams and information elsewhere in this manual to isolate the problem to a specific circuit.

6. CHECK POWER SUPPLIES

<u>WARNING</u>: Use extreme caution when checking power supplies to prevent inadvertent shorting of components etc. Shorts will cause problems!!

If problems appear to be in more than one circuit, check power supplies for correct output voltage and for noise and ripple. Voltages can be measured with either an oscilloscope or a multimeter. Noise and ripple can only be measured with an oscilloscope.

A defective component elsewhere in the circuit could cause the appearance of a power supply problem and affect other circuit operation.

7. CHECK CIRCUIT BOARD / SUBASSEMBLY INTERCONNECTIONS
Once a problem has been isolated to a particular circuit, again check wiring and interconnections and check for damaged components.

8. CHECK WAVEFORMS AND VOLTAGES
Waveform and voltage check can often help to pinpoint a problem circuit. Voltages indicated on the schematic diagram are nominal voltages and will vary from machine to machine. Small variations from the stated voltage most likely will not adversely affect circuit performance. However, significantly different voltages or voltages that are not constant, such as power supply voltages, will affect the circuit.

Checking logic level waveforms with the oscilloscope will often pinpoint a defective circuit. On logic devices, look for switching levels that are midway between the ground and power supply level. When levels are in this area, erratic and unpredictable results can occur in the logic.

Check voltage levels applied to the input pins of the A/D converters to see if they seem reasonable for measurements being taken with the instrument. This will check the signal conditioning and amplifier circuits for the NO and NO_2 sensor. Similarly, check voltage levels from the O_2 amplifier circuit applied to the panel meter.

Monitor power supplies with the oscilloscope to see if noise or spikes are being introduced when solenoid valves switch. This will detect bad filtering capacitors.

9. CHECK INDIVIDUAL COMPONENTS

<u>CAUTION</u>: Observe proper Electro-Static Discharge (ESD) precautions when checking semiconductors.

Transistors
Transistors are best checked under operating conditions. Check for voltages of 0.6 to 0.8 volt across operating emitter to base junctions, and 0.2 volts across saturated emitter to collector junctions. Static tests of transistors may be made with ohmmeters that have a low internal source current. Junction resistance should be low in one direction and high in the other.

Diodes
Check similar to transistors, looking for forward drops of 0.6 to 0.8 volts, low resistance when forward biased, and high resistance when reverse biased.

Integrated Circuits
Check these in operation with the oscilloscope or a voltmeter. A good understanding of the function of the integrated circuit is necessary in order to troubleshoot it. In the AeroNOx, most of the integrated circuits are in sockets to aid troubleshooting and repair.

> ***CAUTION*: Repeated insertion and removal of the CPU (U1) is not recommended, as the socket will not tolerate this. (Learned through experience.)**
>
> **DEFINITION:** Experience: Something you cannot buy, but which you will pay dearly for.

Resistors
Check these with an ohmmeter. Check the parts list to find the tolerance; however, seldom do resistors require replacement unless their value is far out of tolerance.

Inductors
Again, check these with an ohmmeter. Look for open or shorted inductors. The surface mount inductors in the AeroNOx have a resistance of a few ohms.

Capacitors
Leaky or shorted electrolytic capacitors can be checked with an ohmmeter set on its highest range. Watch for steadily increasing resistance as capacitor charges. An open capacitor can be detected with a capacitance meter or by checking to see if it is passing AC signals. The surface mount monolithic capacitors are difficult to check. These should rarely present a problem, but if they do or there is doubt, replacement is likely the easiest solution.

10. REPAIR AND ADJUST THE CIRCUIT
Once the defective component has been identified, replace the defective component. Then, check the performance of the instrument to determine if the replacement has corrected the problem, and also check the performance of other associated circuits to see if they are affected. Depending on the nature of the repair, adjustments may have to be made to the instrument. Confirm also that the power supplies and other circuits are performing correctly.

TROUBLESHOOTING SYMPTOMS AND SOLUTIONS

The following section describes the most common symptoms that are likely to occur with the AeroNOx and suggests the possible solutions.

SYMPTOMS AND SOLUTIONS

1. Instrument has been sitting for some time. It has not been connected to a charger. The alarm LEDs are on and the power switch does not turn the instrument on. The sample pump does not run.

   Possible solutions:

   1. *The battery has become discharged. Connect charger, cycle power, and see if proper operation now occurs. Recharge battery for at least 6 hours.*
   2. *The unit has been subjected to a severe ESD occurrence. Disconnect the AC power supply and remove and disconnect battery for a few seconds. Reconnect battery and check operation.*
   3. *Replace battery if it fails to charge.*

2. Instrument has been sitting for some time. It has not been connected to a charger. When charger was connected and the unit turned on, very high NO values are indicated on the LCD and the alarms are sounding.

   Possible solutions:

   1. *The battery has become deeply discharged and the instrument has been unable to maintain the bias voltage on the NO sensor. Connect charger and allow battery to charge and the instrument to bias the NO sensor for at least 3 hours before attempting to calibrate the instrument and take measurements.*
   2. *If battery fails to take a charge, replace the battery.*

3. LCD display shows AERONOX VX.X even when instrument is turned off.

   Possible solutions:

   1. *The battery has become discharged. Charge the battery.*
   2. *The battery has become discharged and will not charge. Replace the battery.*

4. Oxygen analyzer will not calibrate to room air of 21% O_2.

Possible solution:

1. *Check the output of the O_2 sensor for 11 to 15 mv output in room air. If < 11 mv, replace sensor.*
2. *Check the calibration potentiometer. Erratic display as pot is adjusted indicates faulty pot. Replace it.*
3. *Check cable and connectors connecting the sensor to the circuit board.*

5. Oxygen analyzer will not calibrate to 100% O_2.

Possible solutions:

1. *Check the output of the O_2 sensor for 11 to 15 mv output in room air. Replace sensor if < 11 mv.*
2. *If sensor checks OK above, check plumbing, tubing, and connections for leaks in the system. Ambient air is probably being drawn into the system. Repair leaks.*
3. *Check the calibration potentiometer. Erratic display as pot is adjusted indicates faulty pot. Replace it.*
4. *Check cable and connectors connecting the sensor to the circuit board.*

6. NO or NO_2 sensors are very slow to respond.

Possible solutions:

1. *Sensor may be old and the catalyst has been depleted. Check the date code on the back of the sensor - the last 3 digits of the serial number represent the month and year. Under proper conditions of use sensor life is approximately 18 months. Replace sensor, allow time to bias, and check operation.*
2. *Sensor may have been exposed to gases or conditions, which have damaged or contaminated the sensor. (Read SECTION 2 of Technical Manual.) Replace sensor, allow time to bias, and check operation.*
3. *System may have gas leaks. Check tubing and connections for leaks. Repair leaks if any are found.*
4. *Check status of calibration gases for shelf life or contamination.*

7. NO or NO_2 values will not reach the calibration values.

Possible solutions:

1. *See possible solutions for NO or NO_2 very slow to respond (Symptom #6).*

8. NO or NO_2 values will not stabilize. Values drift while calibrating.

Possible solutions:

1. *See possible solutions for NO or NO_2 very slow to respond (Symptom #6).*
2. *Check wiring harness and connectors that connect the sensors to the circuit boards for loose wires or intermittent connections.*
3. *NO sensor may not be properly biased. Allow more time.*

9. NO or NO_2 will not respond at all to gas.

Possible solutions:

1. *See possible solutions for NO or NO_2 very slow to respond (Symptom #6).*
2. *Check wiring harness and connectors that connect the sensors to the circuit boards for loose wires or intermittent connections.*

10. NO or NO_2 values drift while instrument is in use.

Possible solutions:

1. *See possible solutions for NO or NO_2 very slow to respond (Symptom #6).*
2. *Check wiring harness and connectors that connect the sensors to the circuit boards for loose wires or intermittent connections.*
3. *Incomplete gas mixing may be occurring in the patient circuit. Refer to "Operating Instructions" handbook for Nitric Oxide Delivery Techniques.*

11. NO_2 value displayed is 21 and does not change.

Possible solutions:

1. *NO_2 sensor has been exposed to gas concentrations in excess of 21 ppm. Flush the system with room air or oxygen for a period of time until the value returns to zero. Exposure to high concentrations of gas will shorten sensor life.*
2. *NO_2 sensor has been damaged by overexposure. Replace the sensor.*

12. NO sensor value will not return to zero.

Possible solutions:

1. *NO sensor has been exposed to concentrations of NO > 100 ppm. Flush system with room air or oxygen until value returns to zero. Exposure to high concentrations of gas will shorten sensor life.*

13. Hash mark (-) displayed on either or both of the displays.

Possible solutions:

1. *Sensors have drifted below zero. Rezero the display as in the calibration procedure in "Operating Manual".*

14. Sample pump runs at high speed and then shuts off. "Check Sample Line" illuminates.

Possible solutions:

1. *Sample line, hydrophobic filter, or Nafion line has plugged off. Disconnect filter and lines from instrument and try again. If it operates correctly, check lines and filter for plugging, reconnect, and try unit again.*

2. *Foreign material may have been drawn into instrument and has blocked the metering valve in the sampling system. Check and clean if necessary.*

3. *Pressure transducer that detects plugged lines may have failed. Check output signal of transducer or substitute a known good transducer. Signal should be between 0 - 5 volts and vary as pressure changes. Pump should run correctly if transducer is disconnected from circuit board for testing purposes. Remember to reconnect when finished.*

15. Mass flow display does not return to zero when no flow is present.

Possible solutions:

1. *The zero adjustment has drifted. "Warm up" for 20 minutes and adjust zero as described in "Adjustment" section of manual.*

CORRECTIVE MAINTENANCE

INTRODUCTION

Corrective maintenance refers to the repair of the instrument and the replacement of faulty components. This section details the techniques and procedures to follow when replacing components or repairing this instrument.

MAINTENANCE PRECAUTIONS

In order to minimize the possibility of personal injury, or damage to the instrument, please observe the following:

1. Disconnect the instrument from the AC power source and disconnect the external power supply from the instrument.

2. Open the battery compartment and disconnect and remove the battery.

3. Take care not to short or interconnect conductors on the printed circuit boards when troubleshooting circuit boards with the case open and power applied to the circuit.

OBTAINING REPLACEMENT PARTS

Most of the electronic, electrical, and mechanical parts may be obtained from your AeroNOx distributor or representative. Standard electronic and mechanical components may be obtained from local commercial sources. Proper values, ratings, tolerances, and descriptions are described in the parts lists located elsewhere in this manual. Refer to these for assistance in obtaining parts.

NOTE: ***Always use direct replacement parts whenever possible unless you know that a substitute will not degrade performance of the instrument.***

SPECIAL PARTS

In addition to the standard manufactured components used in this instrument, some parts have been specially manufactured for or selected by International Biomedical for use in this instrument. This should be indicated in the parts list. These parts will have to be ordered directly from International Biomedical.

ORDERING PARTS

When ordering replacement parts for this instrument from International Biomedical, please include the following information:

1. Type or name of the instrument

2. Serial number of the instrument

3. A complete description of the part, including component or reference number if available

4. Part number from the parts list.

MAINTENANCE AIDS

The maintenance aids listed in Table 4-1 will provide service personnel with of the tools required to perform most of the maintenance procedures outlined in this section of the manual. Equivalent tools may be substituted if their characteristics are similar.

Table 4-1 MAINTENANCE AIDS

DESCRIPTION	SPECIFICATIONS	USAGE	EXAMPLE
Soldering Iron	15 - 42 watt	soldering / desoldering	Weller WTCPT Hako 936 Weller WP25
Phillips Screwdriver	#1, #2 tips	assembly / disassembly	Xcelite X101 Xcelite X102
Square Recess Screwdriver (Robertson / Scrulox)	#0, #1, #2	assembly / disassembly	Xcelite SL0 Xcelite SL1 Xcelite SL2
Diagonal Cutters		component removal / replacement	Weller 170-M Xcelite 54CG
Needle Nose Pliers		component removal / replacement	Xcelite 57CG
Blade Screwdriver	3/16” × 4”	assembly / disassembly	Xcelite R3164
Nut Drivers	¼”, 5/16”, 3/8”	assembly / disassembly	Xcelite HS8 Xcelite HS10 Xcelite HS12
Hex Socket Screwdrivers	3/32”, 7/64”, 0.035”, 3/64”	assembly / disassembly	Xcelite P19 Xcelite P764 Xcelite P23
Oscilloscope	100 MHz w/probes	test and measure	Tektronix 2235
Digital Multimeter		test and measure	Fluke 73
Miscellaneous Hand Tools as Deemed Appropriate			
ESD Safe Work Surface and ESD Wrist Strap			
PLCC Extraction Tool		disassembly	OK EX5
Trimmer Adjustment Tool		adjustments	Spectrol Type 8T000 Bourns Type H91
Water Manometer	80 cmH_2O	adjustments	Fabricate as req’d
Gas Flowmeter w/Precision Valve	0 - 250 cc/min	adjustments	
Sample Line / Hydrophobic Filter and Nafion Line		adjustments	International Biomedical “NO Worries”
Gases - NO, NO_2, O_2, N_2		adjustments	
NO/NO_2 Sensor Stimulator		adjustments	
Delivery Line and Regulator		adjustments	
Adjustable DC Power Supply	0 - 20 V @ 2 Amp	adjustments	

AERONOX PREVENTIVE MAINTENANCE SCHEDULE

SENSORS

- O_2: Replace every 2 years.
  - Rationale:
    - Operating Life 800,000 %hours @ STP (MSA datasheet)

$$\frac{8e5\%hrs}{50\%} \times \frac{1day}{24hrs} \times \frac{1year}{365.25day} = 1.82years(median)$$

$$\frac{8e5\%hrs}{100\%} \times \frac{1day}{24hrs} \times \frac{1year}{365.25day} = 0.91years(\text{max } usage)$$

$$\frac{8e5\%hrs}{21\%} \times \frac{1day}{24hrs} \times \frac{1year}{365.25day} = 4.35years(\text{min } usage)$$

- NO_2: Replace yearly.
  - Rationale:
    - Expected Operating Life: 2 years ***in air*** (3NDH datasheet)

- NO: Replace every 2 years.
  - Rationale:
    - Expected Operating Life: 3 years ***in air*** (3NF/F datasheet)
      - Nominal range is 0 - 1000 ppm NO, therefore normal usage occurs at <10% of nominal.

<u>NOTE</u>: For replacement procedures, refer to the sensor package label and to the following section.

BATTERY

- Replace at least every 2 years.
  - Rationale:
    - Cycle life vs. depth of discharge (Panasonic VRLA Battery datasheet)
      - 200 cycles for 100% discharge (66.7 full discharge events per year)
      - 450 cycles for 50% discharge (150 discharge events per year)
      - 1200 cycles for 30% discharge (400 discharge events per year)
    - Potential for decreased length of discharge cycle, noticed at a time of increased vulnerability (i.e. on internal or external transports)

PLEASE NOTE: When the AeroNOx is being used for NO therapy as intended, it is critical that the AeroNOx always be operated with a fully charged functional battery installed and connected to it even when the AeroNOx is also connected to an external power supply because ANY interruption to the bias voltage on the sensors (e.g. intentional or unintentional disconnection of the external power supply) will cause spikes in the readings. As explained in Section III of the *AeroNOx Operating Manual*, the electrochemical NO and NO_2 sensors in the machine require a stable voltage source to maintain their bias and give accurate readings and this stable voltage source is the 6 VDC Panasonic VRLA Battery supplied with the AeroNOx.

Please also note that if a battery is deeply discharged, its operating life will be significantly shortened. If batteries are left in a discharged state for any period of time, they may become damaged making them incapable of accepting and holding a charge even when they are again connected to the 12 VDC charger supplied with the AeroNOx. A fully charged **NEW** 6 VDC 4.2Ah/20HR Panasonic VRLA Battery is capable of operating the AeroNOx reliably for up to 5 hours. This time will decrease as the battery ages and particularly if the battery has been allowed to discharge as explained above. (More on battery life and maintenance is located in the AeroNOx Operating Manual.)

POWER SUPPLY CONNECTION

- Check regularly to ensure that the power supply connector and charger receptacle in the AeroNOx continue to mate snugly. Replace worn parts.
- Secure the power supply so that it cannot become partially or completely disconnected from the AeroNOx.
  - Rationale:
    - Because chargers are repeatedly connected and disconnected from the AeroNOx during normal use, there is the potential that after several years the spring tension of the contacts in the mating connectors may decrease and/or the conductive plating in charger jack (i.e. the charger receptacle in the AeroNOx itself) or the mating connector on the charger may become worn to the point that the charger and the charger jack may no longer make a good connection. The result of the intermittent contact or loose connection is that:
      - the AeroNOx battery may not be charging when the charger is plugged in, which may lead to lower than expected battery power when required.
      - the charger may become disconnected from or make intermittent contact with the AeroNOx when the AeroNOx or the charger are bumped or moved. If the battery power is already insufficient at this time, a further loss of power will result in erroneous readings and/or a “NO OFF!” condition.

POTENTIOMETERS (NO, NO_2, O_2)

- Replace every year.
  - Rationale:
    - 200 cycle rotational life (BI Technologies datasheet)
      - Adjusted weekly during gas calibration
    - Fluctuating displayed values with failure

<u>NOTE</u>: For replacement instructions, refer to the package label for the potentiometer assemblies.

POWER SUPPLY FAN

- Replace every year.
  - Rationale:
    - Potential loss of unit function with fan loss (overheating of voltage regulators)

NOTE: For replacement instructions, refer to the package label for the fan assembly.

MAINTENANCE PROCEDURES

- Pump Cleaning Procedure (For instructions, refer to the Pump Cleaning Procedure later in this section.)
  - Perform yearly
  - Rationale:
    - Pump is fouled by moisture / crystallization of gases.
    - Procedure is straightforward to perform.

- Sample Rate Adjustment (For instructions, refer to the Sample Rate Adjustment Procedure later in this section.)
  - Perform yearly as well as after every Pump Cleaning Procedure
  - Rationale:
    - Difficult to detect changes in sample rate with normal device usage
    - Low sampling rate may cause unstable sensor readings.

- MFM Flow Check / Leak Test (For instructions, refer to the MFM Flow Check / Plumbing Leak Test Procedure later in this section.)
  - Perform yearly
  - Rationale:
    - MFM zero may drift with device age.
    - Leaks may be introduced inadvertently by sharp jarring of device.
    - Leaks may be introduced inadvertently during servicing of the gas delivery circuit.

MAINTENANCE PROCEDURES

BATTERY REPLACEMENT - REMOVAL / INSTALLATION

1. Refer to Figure 4-1 for further information.
2. Lay the unit face-down on a soft clean surface.
3. Remove the four flat head Phillips screws securing the battery compartment cover.
4. Remove the cover.
5. Lift the battery out of the compartment and separate the mating polarized connector.
6. Install the new battery by connecting the two pin polarized connector and carefully placing the battery on its side in the battery compartment.
7. Ensure the battery is oriented with the connector end located at the same end as the mating plug.
8. Position any excess wire beside the battery to ensure that no wires will be pinched when the cover is replaced.
9. Replace the cover and secure with the four screws. Do not over-tighten.

REPLACEMENT OF NITRIC OXIDE AND NITROGEN DIOXIDE SENSORS

INITIAL PREPARATIONS

1. Refer to Figure 4-2.
2. Disconnect any external power source.
3. Disconnect and remove the battery as per instructions.
4. Lay the unit face-down on a flat, clean, anti-static surface.
5. Remove the four recessed Phillips screws located in the four corners of the bottom half of the case.
6. Hold the case together and carefully turn it over so that it is face up.
7. Carefully lift the top half of the case so that it is just free of the bottom half.
8. Lift up and carefully hinge back the top half of the case and lay it down so that it is face down.
9. The internal components of both halves are now exposed ready for servicing. See Figure 4-3.

NITRIC OXIDE AND NITROGEN DIOXIDE SENSOR REPLACEMENT

1. Refer to Figure 4-4 & Figure 4-5.
2. Locate the clear plastic manifold situated in the bottom case half.
3. Identifying markings are engraved on the plastic manifold. Locate the Nitric Oxide or the Nitrogen Dioxide cell.
4. Remove the three screws holding the small printed circuit board and the cell to the manifold.
5. Carefully lift the circuit board free of the cell and lift cell from the manifold. The gasket between the cell and the manifold may hold the cell tightly to the manifold. Gentle force will cause the cell to come free.
6. Ensuring the gasket is in place, orient and place the new cell on the gasket.
   NOTE: Remove the shorting spring on the NO_2 sensor before installing.
7. Attach the printed circuit board to the cell and secure with the three screws to the manifold. Do not over tighten.
8. If no further service is required, reassemble the case halves and reinstall the battery as per instructions.

Figure 4-1 BATTERY REMOVAL / REPLACEMENT

REASSEMBLE THE CASE

1. Carefully hinge up and place the top half of the case onto the bottom half ensuring that no wiring or tubing is pinched or kinked.
2. Carefully hold both halves together, turn over, and place face down. Reinstall the four screws that hold the case together. Tighten firmly but do not over-tighten.

OXYGEN SENSOR REPLACEMENT

1. Locate the clear plastic manifold situated in the bottom case half. See Figure 4-3.
2. Identifying markings are engraved on the plastic manifold. Locate the Oxygen cell.
3. Noting the orientation of the electrical connections, carefully pull apart the connection to the Oxygen cell.
4. Without disturbing the adjacent wiring or tubing, carefully unscrew the Oxygen cell in a counter-clockwise direction from the manifold. When free, lift clear. See Figure 4-6.
5. Ensure that the sealing “O-ring” is in place on the replacement cell. Carefully thread the cell clockwise into the manifold. If it does not thread in easily, it is likely cross-threaded. In that situation, remove the cell, inspect the threads for damage, and reinstall. If threads are damaged, it may be necessary to use a new cell.
6. Finger-tighten the cell firmly into the manifold.
7. Carefully orient the electrical connection and reconnect.
8. If no further service is required, reassemble the case halves and reinstall the battery as per instructions.

Figure 4-2 REMOVAL OF 4 SCREWS TO SEPARATE HALVES

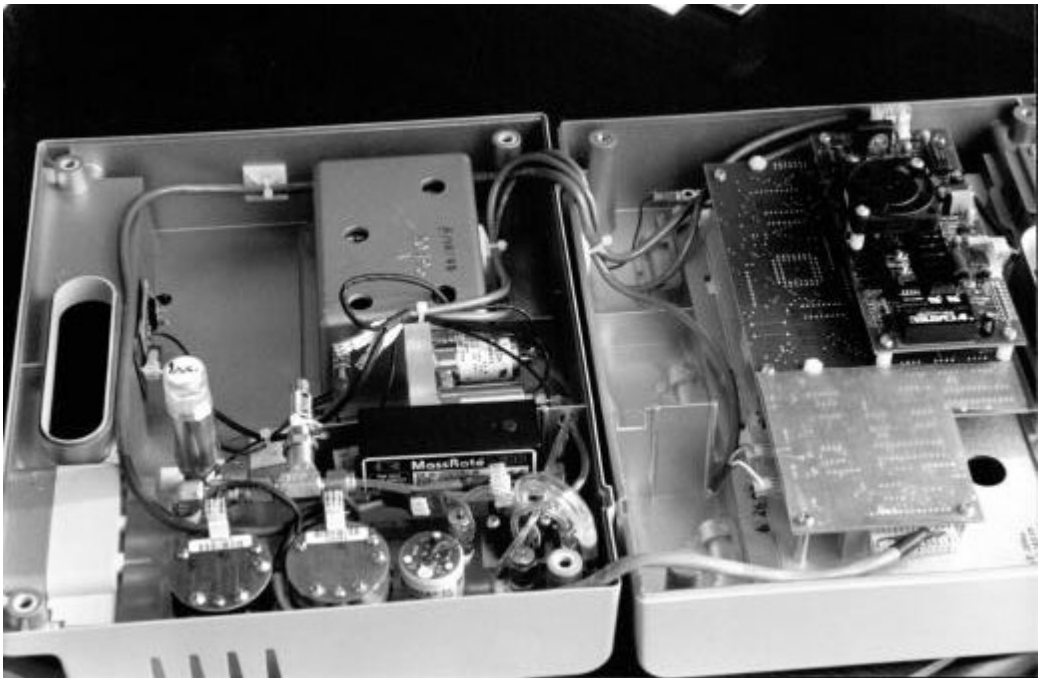

Figure 4-3 CASE OPENED FOR SERVICING

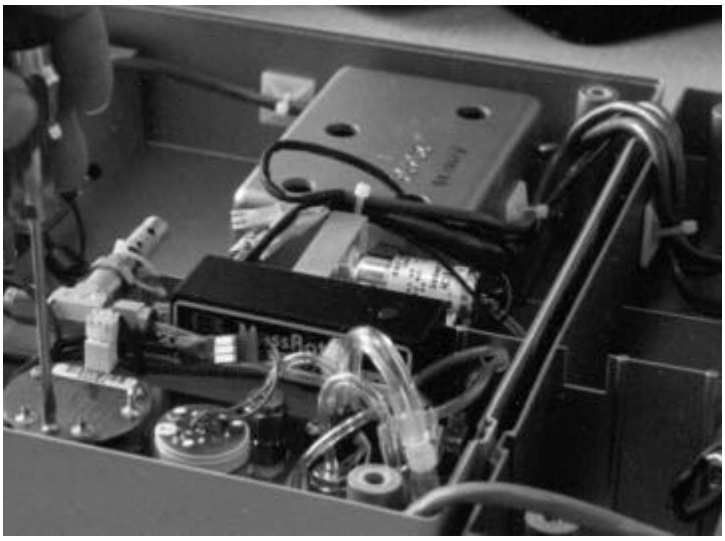

Figure 4-4 REMOVAL OF NO_2 PRINTED CIRCUIT BOARD

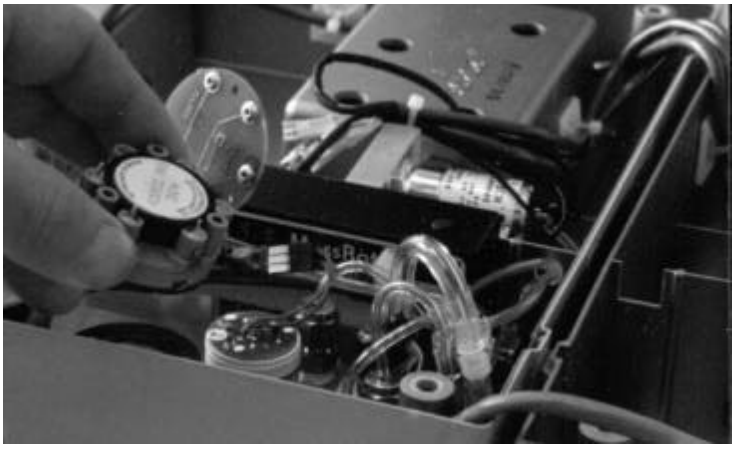

Figure 4-5 REMOVAL OF NO_2 CELL

Figure 4-6 REMOVAL OF O_2 CELL

PUMP CLEANING PROCEDURE FOR AERONOX

1. SCOPE

This section contains detailed instructions for disconnecting, cleaning, and reinstalling the AeroNOx pump assembly (P/N 358-0195).

Indications for this procedure are:

1.1. Lower maximum flow rates than those outlined the in the *AeroNOx Sample Rate Adjustment Procedure*

1.2. Evidence of dirty tubing pre- or post-pump

1.3. Intermittent valve sticking indicated by an intermittent change in tone during pump operation not associated with changing load conditions

2. TOOLS AND MATERIALS

ESD-protected workstation	# 1 and # 2 Phillips head screwdrivers
# 0 Phillips head precision screwdriver	# 0 and # 1 square socket head screwdriver
Tweezers	Q-tip cotton swab
Isopropyl alcohol	

3. ADDITIONAL DOCUMENTS REQUIRED

3.1. AeroNOx Sample Rate Adjustment Procedure

3.2. "AeroNOx Calibration Procedure" Section V in the AeroNOx Operating Manual (P/N 715-7000)

4. INSTRUCTIONS

CAUTION: Open the AeroNOx in an ESD-safe environment and take ESD precautions throughout this procedure to prevent damage to the circuit boards located in the top half of the case.

4.1. Initial Preparations

4.1.1. Power the AeroNOx off and disconnect the AeroNOx Universal Power Supply.

4.1.2. Lay the unit face-down on a clean flat anti-static surface.

4.1.3. Open the battery compartment cover by removing the four Phillips screws, and disconnect the mating battery connectors to prevent the AeroNOx being accidentally powered on.

4.1.4. Re-secure the battery compartment cover.

4.1.5. Open the AeroNOx case by removing the four recessed Phillips screws.

4.1.6. Hold the case together and carefully turn it over so that it is face-up.

4.1.7. Lift up and carefully unhinge the top half of the case and lay it face-down.

4.1.8. The internal components are now exposed and ready for servicing.

4.2. To remove the pump assembly from the main unit, proceed as follows.

4.2.1. To facilitate the re-installation process make careful note of the orientation of the pump assembly and tubing before disassembly. Refer to Figure 4-7 or Figure 4-8 below.

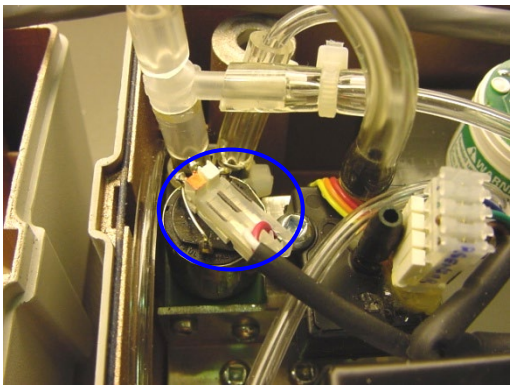

Figure 4-7 PUMP POWER CABLE CONNECTOR

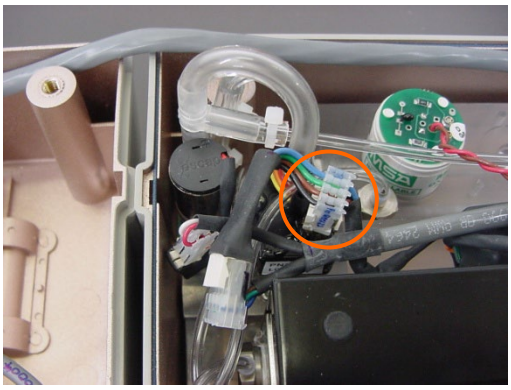

Figure 4-8 PRESSURE SENSOR CABLE CONNECTOR

4.2.2. Disconnect the power cables from the pump and pressure sensor assemblies.

4.2.3. Remove the two 6-32 × ¾" screws mounting the pressure sensor assembly to the metal pump bracket.

4.2.4. Now remove the two 6-32 × ¼" screws securing the metal pump bracket to the gas sampling assembly (i.e. the manifold).

4.2.5. Carefully lift the metal bracket assembly out of the case bottom and tilt the pump assembly to expose the black base of the pump as shown below. Be careful not to apply excessive torque or tension to the tubing.

NOTE: The pump serial number is now visible should you wish to record it for your records.

Figure 4-9 PUMP ASSEMBLY WITH BLACK BASE EXPOSED FOR SERVICING

4.3. To disassemble and clean the pump, refer to Figure 4-10 and proceed as follows.

4.3.1. Remove the four Phillips head screws securing the black base of the pump.

4.3.2. Gently separate the two halves of the black case. **Be careful not to lose or drop the O-ring or the two leaf valves located inside the base.**

4.3.3. To facilitate reassembly, note how the O-ring and the two leaf valves have been positioned.

4.3.4. Remove the O-ring and the leaf valves and clean them with a cotton swab dipped in isopropyl alcohol.

4.3.5. With the cotton swab and alcohol, also clean the black diaphragm attached to the pump body and all surfaces of the black base.

4.3.6. Allow all cleaned parts to dry completely before reassembling.

4.4. To reassemble the pump, proceed as follows.

4.4.1. Replace the O-ring as shown in Figure 4-10, ensuring that it is completely seated.

4.4.2. Replace the leaf valves as shown in Figure 4-10, ensuring that they are properly seated.

4.4.3. Carefully reassemble the two halves of the black case, ensuring that the two notches align and that the leaf valves remain properly positioned.

4.4.4. Secure the black pump base to the main pump unit with the four Phillips head screws removed during pump disassembly.

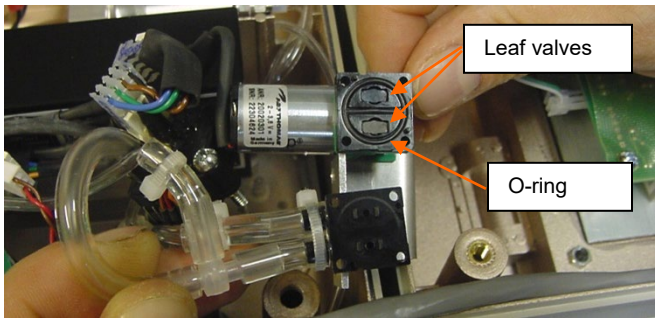

Figure 4-10 DISASSEMBLY OF PUMP

4.5. Reinstall the pump assembly as follows.

4.5.1. Replace the metal mounting bracket into the AeroNOx case bottom. Be careful not to damage or disconnect any of the tubing while doing so, paying careful attention to the connection next to the “power pump cable connector” in Figure 4-7.

4.5.2. Secure the bracket to the manifold with the two 6-32 × ¼” screws.

4.5.3. Remount the pressure sensor assembly onto the metal bracket with the two 6-32 × ¾” screws.

4.5.4. Ensure correct polarity and reconnect the pump power cable.

4.5.5. Ensure correct polarity and reconnect the pressure sensor power cable to the header attached to the pressure sensor.

4.5.6. Reconnect the battery charger to the AeroNOx.

4.5.7. Power the AeroNOx on and listen to the pump. It should be running smoothly and continuously and should be making a consistent noise, indicating proper valve function (i.e. there should not be any intermittent changes in tone during pump operation not associated with changing load conditions). Proceed to Step 4.6.

4.5.8. If the intermittent changes in tone remain, the leaf valves could be sticking because they slipped out of position during reassembly. Disconnect the battery charger, disassemble the pump as described in previous steps, check valve positioning, and then reassemble.

4.5.9. If the problem persists, it is likely that the pump will need to be replaced. Contact International Biomedical for part and pricing information.

4.6. Once the pump has been reinstalled, reset the Sample Flow Rate as per the *AeroNOx Sample Rate Adjustment Procedure* located in this manual.

NOTE: If sample flow rate cannot be adjusted as specified and the pump has already been cleaned as described in this procedure, the pump assembly may need to be replaced.

4.7. Power the AeroNOx off, reseal the unit with the four Phillips head screws taking care not to pinch tubing or wires between the enclosure top or bottom, remove the battery compartment cover, and reconnect the mating battery connectors.

4.8. Reconnect the power supply and allow **the sensors to bias** before calibrating the AeroNOx. When power supply to the AeroNOx is interrupted, the NO sensor drifts toward an unbiased state, and the readings will be unstable until the sensor is returned to a biased state (-300 mV measured Reference [ground] to Counter [positive]). If the sensor was previously in a biased state, then it should be biased for ½ hour or as long as the power supply was disconnected, whichever is greater. If the sensor was unbiased prior to the procedure, bias the sensor for a minimum of 24 hours.

4.9. Calibrate the AeroNOx as per the procedure in Section V of the AeroNOx Operating Manual.

4.10. It is recommended that you document all servicing and test activities for the AeroNOx in the event that further troubleshooting is required through International Biomedical.

AERONOX SAMPLE RATE ADJUSTMENT PROCEDURE AND RECORD

1. SCOPE

This section provides detailed instructions for adjusting sample flow and the restricted line trip point for the AeroNOx. This procedure is to be performed at least once yearly and as part of every servicing process because:

- Changes in sample flow rate are difficult to detect with normal device usage.
- Low sampling rate may cause unstable sensor readings.

Refer to Section 2, page 2-14, for a full explanation of "Sampling System and Sampling System Monitor" function.

2. TOOLS AND MATERIALS

2.1. ESD-protected workstation and grounded wrist strap

2.2. Sampling line with hydrophobic filter and nafion tubing (e.g. P/N 415-0004)

2.3. Water manometer (water column)

2.4. Gas Flowmeter or Flow Calibrator

2.5. Fine Resolution Needle Valve

2.6. Potentiometer adjusting tool (e.g. calibration screwdriver, P/N 416-0010)

2.7. Small pliers

2.8. # 1 Phillips head screwdriver

2.9. Multimeter with test leads

3. ADDITIONAL DOCUMENTS REQUIRED

3.1. "AeroNOx Calibration Procedure" Section V in the AeroNOx Operating Manual (P/N 715-7000)

3.2. Sample Rate Adjustment Quality Record (attached)

4. INSTRUCTIONS

CAUTION: Open the AeroNOx under test only in an ESD-protected environment and take ESD precautions to prevent damage to the circuit boards located in the top half of the AeroNOx.

4.1. Connect power supply to AeroNOx under test, power AeroNOx on, and allow unit to run for at least 20 minutes before attempting to set sample flow as described below.

4.2. Set up test equipment as shown in the Figure 4-11.

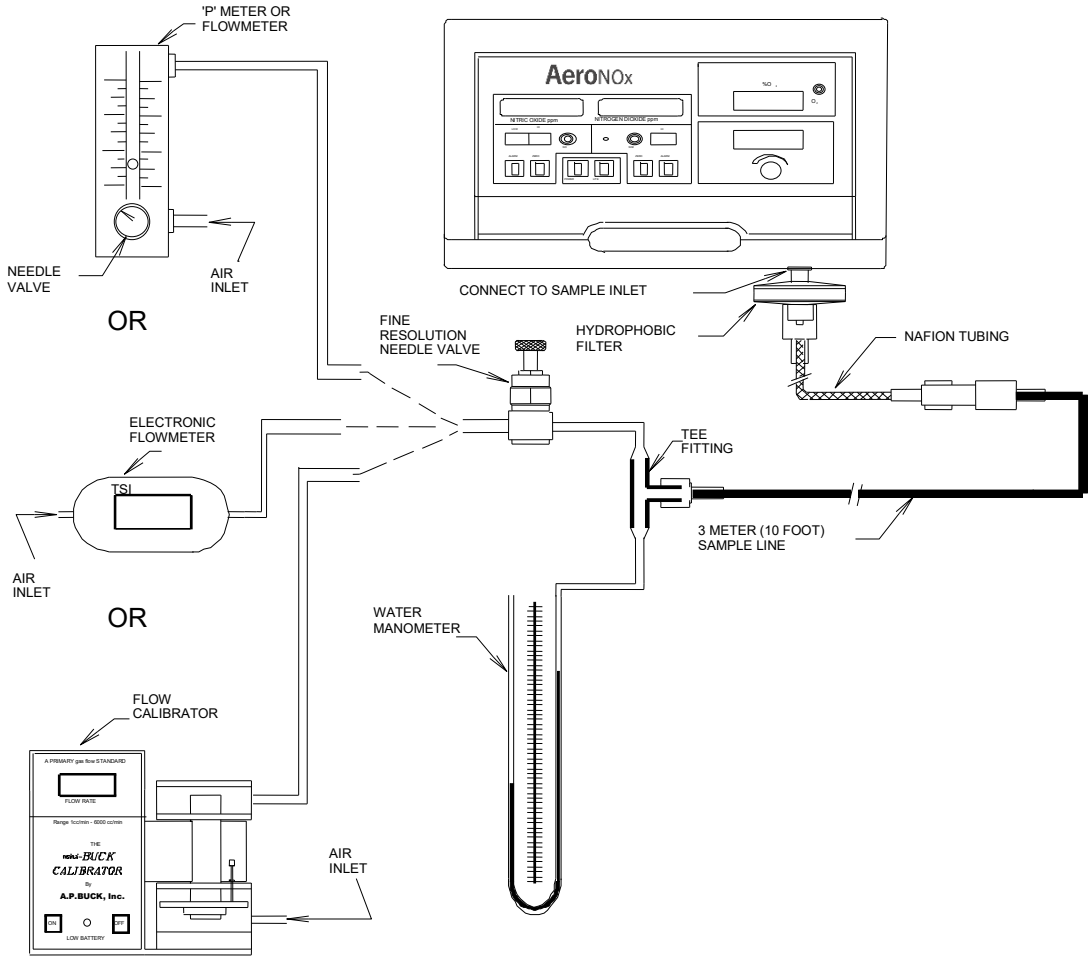

Figure 4-11 EQUIPMENT CONFIGURATION FOR SETTING SAMPLE FLOW AND RESTRICTED LINE TRIP POINT

4.3. Open the AeroNOx under test as follows.

4.3.1. Power the AeroNOx under test **off** and disconnect the AeroNOx Power Supply.

4.3.2. Lay the unit face-down on a clean flat anti-static surface.

4.3.3. Open the AeroNOx case by removing the four recessed Phillips screws.

4.3.4. Hold the case together and carefully turn it over so that it is face-up.

4.3.5. Lift up and carefully unhinge the top half of the case and lay it face-down.

4.3.6. The internal components are now exposed and ready for sample flow rate adjustment.

Please note that, when checking and/or setting AeroNOx sample flow rate, the critical specification is that when the pump shuts off at -50 cm H_2O (± 3 cm), the flow as measured by the test equipment (that is, the flow calibrator or test gas flow meter) must be at least 120 ml/min but less than 220mL/min. Revisions to the procedure have not changed this specification.

4.4. Ensure that test equipment flow meter and fine resolution needle valves are fully open to allow unrestricted flow.

4.5. Ensure that the Sample Line with Hydrophobic Filter is securely connected to the AeroNOx "ANALYSIS SAMPLE INLET" fitting as shown in Figure 4-11 and power the AeroNOx **ON**.

4.6. Measure the "as found" flow under no load with the flow calibrator or gas flow meter and document this reading in the attached record. The flow rate at no load must be at least 120 sml/min and should be no greater than 220 sml/min.

4.7. Adjust the Fine Resolution Needle Valve on the test equipment until the water column in the manometer rises to -50 cm (± 3 cm), at which point the pump should shut off. Back the needle valve off, and power the AeroNOx off and then back on again to reset the pump. Then, repeat this step one more time to determine whether the flow rate under load as measured by the test equipment is within the specified parameters, namely that when the pump shuts off at -50 cm (± 3 cm) H_2O, the measured flow is at least 120 ml/min and no greater than 220 ml/min. Document the "as found" pump shut off point and the flow under load in the attached record.

4.8. If sample flow rate was still within the specified parameters, no further adjustments are required. Sign and date the "AeroNOx Sample Rate Adjustment Quality Record" and proceed to Step 4.12.

4.9. If sample flow rate adjustment is required, proceed as follows.

4.9.1. Ensure that test equipment flow meter and fine resolution needle valves are fully open to allow unrestricted flow. Typically the restriction of the tubing and valving will produce a 4 - 8 cm differential on the water column manometer at this time.

BEFORE PROCEDING FURTHER, READ AND UNDERSTAND THIS PARAGRAPH. THE INTERNAL METERING VALVE NORMALLY DOES NOT HAVE TO BE ADJUSTED UNLESS IT HAS BEEN REPLACED, DISASSEMBLED FOR CLEANING OR REPAIR, OR IS PART OF A NEW ASSEMBLY THAT HAS NEVER BEEN SET UP. IF THE INTERNAL NEEDLE VALVE DOES NOT HAVE TO BE ADJUSTED GO TO STEP 4.9.6.

4.9.2. Refer to highlighted sections in pictures below and loosen the smaller of the two set screws (Figure 4-12) or the locking nut (Figure 4-13) on the metering valve in the AeroNOx under test. Open the valve completely by turning the knob (Figure 4-12) or the adjusting screw (Figure 4-13) fully counterclockwise to allow unrestricted flow.

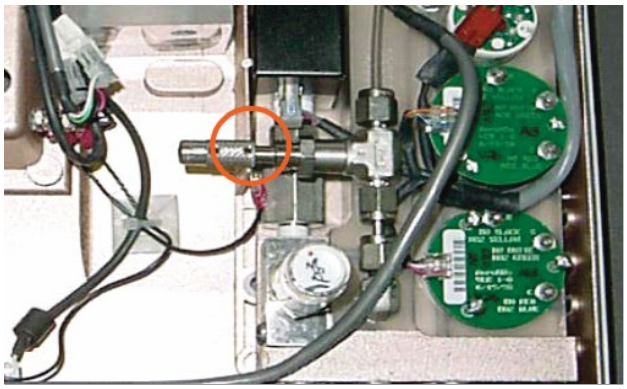

Figure 4-12 METERING VALVE SET SCREW

OR

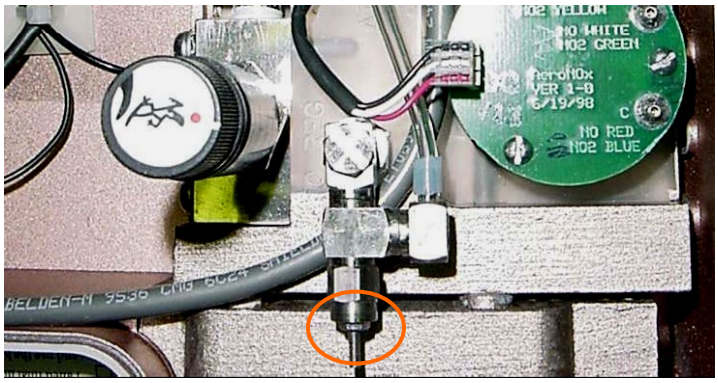

Figure 4-13 METERING VALVE LOCKING NUT

4.9.3. Adjust the pump speed potentiometer **R17** (shown in Figure 4-14) on the AeroNOx power board until the flow calibrator or test gas flowmeter reads 185 mL/min (± 5 mL).

4.9.4. Restrict the flow by adjusting the metering valve in the AeroNOx clockwise until the flow calibrator / test flowmeter reads 175 mL/min (± 5 ml). Lock in position with the nut or the set screw.

4.9.5. Adjust the Fine Resolution Needle Valve on the test equipment until the water column in the manometer rises to -50 cm (± 3 cm). The calibrator / test flowmeter should read more than 120 ml/min flow but less than 220 ml/min. If it does not, increase the pump speed with R17 (CW) until it does. Adjust the Fine Resolution Needle Valve on the test equipment until it is fully open (CCW) and ensure that the flow is still greater than 120 mL/min flow but less than 220 mL/min. If it is not, the metering valve may have to be adjusted slightly as in Step 4.9.4. to reach a condition where the pump speed setting of R17 and the adjustment of the metering valve will produce the desired results.

NOTE: If the pump shuts off BEFORE the water column reaches -50 cm (± 3 cm), turn the **R24** potentiometer (shown in Figure 4-14) on the power board counterclockwise 2 or 3 turns, and then repeat the procedure as described in this step.

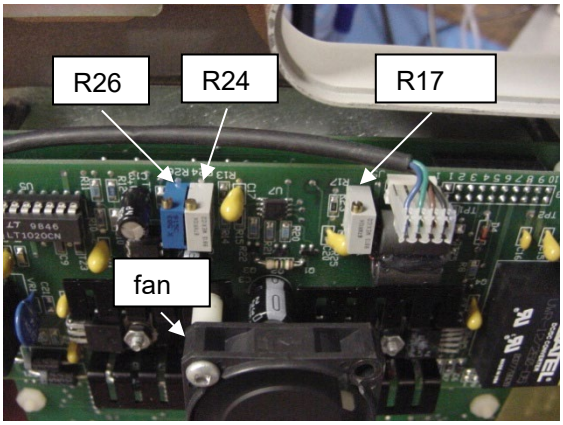

Figure 4-14 PUMP ADJUSTMENT POTENTIOMETERS

4.9.6. Observe the flow rate as measured by the test equipment as the water column increases. When the water column has reached -50 cm (± 3 cm), the reading on the flow calibrator or test gas flowmeter must be at least 120 ml/min and no greater than 220 ml/min. If it is not, adjust pump speed potentiometer R17 until a reading of 125 mL/min (± 5 mL) is obtained.

NOTE: If pump speed had to be readjusted to obtain 125 mL/min, open the Fine Resolution Needle Valve on the test equipment completely and confirm that the reading on the calibrator / test gas flowmeter is still in the range of greater than 120 mL/min and less than 220mL/min.

4.9.7. When the preceding steps have been successfully completed, set the pump's turn-off point by adjusting potentiometer R24 located on the AeroNOx power board (refer to Figure 4-14) slowly clockwise until the pump shuts off. Repeat this step until the pump always shuts off at -50 cm (± 3 cm) of water.

4.9.8. With the pump off but the AeroNOx still powered on, use the multimeter to measure the pressure sensor offset voltage by placing the positive multimeter lead onto J5 Pin 1 (i.e. the blue wire pin beside the pump speed R17) and the negative lead onto J5 Pin 4 (i.e. the black wire pin in the J5 connector). Turn the R26 offset adjustment pot on the AeroNOx power board until the multimeter display reads 1.95 VDC ± 0.05 VDC.

4.9.9. To reset the pump, back the needle valve off, and power the AeroNOx off and then back on again.

4.9.10. Test the sample rate adjustment at least once as follows before "locking" the metering valve in the AeroNOx if the internal metering valve had to be adjusted. With the AeroNOx powered on and the pump running continuously, adjust the Fine Resolution Needle Valve in the test equipment to a point just prior to the pump shutting off (i.e. to -46 cm or -47 cm of water). Let the pump run for at least a minute to confirm that it does not shut off prematurely and then increase the water column to -50 cm (± 3 cm), at which point the pump should stop completely and the test meter should have read greater than 120 mL/min.

4.9.11. If the pump slows down but does not stop completely, repeat steps 4.9.6 through 4.9.7.

4.9.12. When sample rate has been successfully adjusted as described in steps 4.9.3. through 4.9.10. above, "lock" the metering valve (if it has been adjusted) in the AeroNOx. To do so, observe the reading on the test calibrator / meter carefully to ensure that the flow remains stable while tightening the setscrew with an appropriately sized Allen key (refer to Figure 4-12) or the nut with a small pair of pliers (refer to Figure 4-13). Hold the adjusting screw on the needle valve shown in Figure 4-13 in position with a calibration screwdriver while tightening the nut with the pliers. The nut (or the set screw) only needs to be snug; **do not** use excessive force.

NOTE: If the flow changes by more than 5 mL/min on the test meter while "locking" the AeroNOx metering valve, back off the setscrew or the nut, and then attempt to tighten again without altering the flow.

4.10. Confirm sample rate adjustment and complete the “ADJUSTED Sample Rate” portion of the attached Quality Record. To do so, proceed as follows:

4.10.1. Open the Fine Resolution Needle Valve on the test equipment fully to allow unrestricted flow. The test gas flowmeter or flow calibrator should now read at least 120 mL/min and no more than 220 mL/min. Record the actual reading in the section “Flow rate at no load”.

4.10.2. Slowly close the valve until the water column reaches -50 cm (± 3 cm). At this point, the pump should stop completely and the test flowmeter or flow calibrator should read at least 120 mL/min. and no more than 220 mL/min.

4.10.3. Record the actual readings in the “Pump shuts off at” and “Flow rate at -50 cm H_2O” sections.

4.10.4. Ensure the Quality Record is complete and then sign and date it.

4.11. If sample flow rate could not be adjusted as specified above, clean the pump as described in the Pump Cleaning Procedure and then repeat the Sample Rate Adjustment Procedure described in steps 4.9. and 4.10. (On the Quality Record document, indicate that the pump required cleaning.)

4.12. Sample Rate Adjustment Procedure is then complete. Proceed as follows:

4.12.1. Power the AeroNOx off and disconnect the sample line.

4.12.2. Reseal the unit with the four Phillips head screws. Be very careful not to pinch any tubing or wires between the enclosure top and bottom.

4.12.3. Reconnect the power supply, power the AeroNOx on and calibrate the AeroNOx as per the procedure in Section V of the AeroNOx Operating Manual.

4.12.4. Document all servicing for the AeroNOx unit in the event that further troubleshooting is required by your AeroNOx representative.

international BIOMEDICAL

AeroNOx Sample Rate Adjustment Quality Record for AeroNOx S/N _____

Record the equipment identification number and the calibration due date (if applicable) for the following:

Water Manometer (water column): ID # _____ Cal. Due Date _____

Gas Flowmeter or Flow Calibrator: ID # _____ Cal. Due Date _____

Fine Resolution Metering Valve: ID # _____ Cal. Due Date _____

Multimeter: ID # _____ Cal. Due Date _____

AS FOUND Sample Flow Rate Data:

1. Flow rate at no load is _____. [specification: 120 mL/min to 220 mL/min]
2. Pump shuts off at _____ cm H_2O. [specification: -50 cm (± 3 cm)]
3. Flow rate at -50 cm H_2O was _____. [specification: 120 mL/min to 220 mL/min]

☐ **Pass. Sample rate does NOT require adjustment.**
☐ **Fail. Sample rate needs to be adjusted as specified.**

ADJUSTED Sample Rate Flow Data:

1. Flow rate at no load is _____. [specification: 120 mL/min to 220 mL/min]
2. Pump shuts off at _____ cm H_2O. [specification: -50 cm (± 3 cm)]
3. Flow rate at -50 cm H_2O was _____. [specification: 120 mL/min to 220 mL/min]

PASS/FAIL

☐ **Pass.** Sample rate has been adjusted as specified.
☐ **Fail.** Sample rate could not be adjusted as specified. Recommend:
- ☐ Pump Cleaning
- ☐ Pump Replacement
- ☐ Other (e.g. pressure sensor replacement) _____

Signature: _____ **Date:** _____

AERONOX MFM FLOW CHECK / PLUMBING LEAK TEST PROCEDURE

1. SCOPE

This section contains detailed instructions for checking the MFM (mass flow meter) flow and for ensuring that there are no leaks in the delivery circuit plumbing or around the stainless steel fittings in an AeroNOx. This procedure is to be performed yearly and as part of every servicing process (unless otherwise specified in the procedure) because:

- MFM zero may drift with device age
- leaks may be introduced inadvertently by sharp jarring of the device
- leaks may be introduced inadvertently during servicing of the gas delivery circuit

2. TOOLS AND MATERIALS

2.1. ESD-protected workstation and grounded wrist strap

2.2. Potentiometer adjusting tool (e.g. calibration screwdriver, P/N 416-0010)

2.3. A second calibrated AeroNOx to be used for leak testing

If a second nitric oxide analyzer is not available, calibrate the AeroNOx to be leak tested and use it for the testing where indicated.

2.4. Sampling Line with hydrophobic filter and nafion tubing (e.g. P/N 415-0004)

2.5. Delivery Line with Male-Male connectors (P/N 374-3014)

2.6. Braided stainless steel hose with Swagelok QC4 male quick connect fitting at each end (e.g. SS 3 ft. Hose assembly, P/N 731-9371)

2.7. Compressed nitric oxide delivery gas cylinder

2.8. Delivery regulator (P/N 731-9142)

2.9. Plastic tubing clamp

2.10. Fan (See **WARNING!** below.)

2.11. #1 Phillips head screwdriver

2.12. Flow calibrator with range 0 to ≥ 2.0 Lpm (e.g. M-5 mini-Buck 0 to 6000 cc flow calibrator)

2.13. Delivery Line with Male-Male Connectors (P/N 374-3014), one end modified for use with the flow calibrator

3. ADDITIONAL DOCUMENTS REQUIRED

3.1. AeroNOx Sample Rate Adjustment Procedure

3.2. “AeroNOx Calibration Procedure” Section V in the AeroNOx Operating Manual (P/N 715-7000)

4. INSTRUCTIONS

WARNING! To avoid inadvertent NO/NO_2 exposure from a leak in the system, the leak test should be conducted in a well-ventilated area with positive airflow supplied by a fan directed over the test area.

CAUTION: **Open the AeroNOx under test only in an ESD-protected environment and take ESD precautions to prevent damage to the circuit boards located in the top half of the AeroNOx.**

4.1. Connect a power supply to AeroNOx under test, power AeroNOx on, and **allow unit to run for at least 20 minutes before proceeding.**

4.2. Initial Preparations

4.2.1. Power the AeroNOx under test **off** and disconnect the AeroNOx Universal Power Supply.

4.2.2. Lay the unit face-down on a clean, flat, anti-static surface.

4.2.3. Open the AeroNOx case by removing the four recessed Phillips head screws in the case bottom.

4.2.4. Hold the case together and carefully turn it over so that it is face-up.

4.2.5. Lift up and carefully unhinge the top half of the case and lay it face-down.

4.2.6. The internal components are now exposed and ready for testing.

4.3. Power the AeroNOx **on** again. Since the AeroNOx under test had been running with power on for 20 minutes, the Nitric Oxide flow meter display should now read “0.00”. **If it does not, zero the MFM (i.e. the mass flow meter) manually.** To do so, refer to Figure 4-15 and proceed as follows.

4.3.1. Remove the rubber plug in the top of the MFM.

4.3.2. Use a calibration screwdriver to adjust the potentiometer in the MFM until the display reads “0.00” but **not** “-0.00”.

4.3.3. Replace the rubber plug.

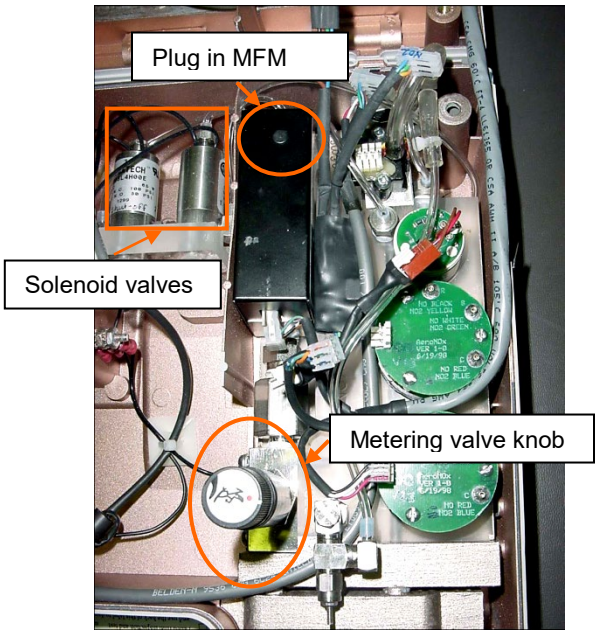

Figure 4-15 ADJUSTMENT OF MFM

4.4. To prepare the AeroNOx that will be used to leak check the AeroNOx under test, refer to Figure 4-16 and proceed as follows.

4.4.1. Attach the Sampling Line to the fitting labeled ANALYSIS SAMPLE INLET.

4.4.2. Set the NO HI thumbwheels located on the front panel to “00”.

4.4.3. Power this AeroNOx on, and “zero” both the NO and the NO_2 channels by pressing first the NO ZERO button located on the front panel until the word “DONE!” appears on the display and then the NO_2 ZERO button until the word “DONE!” appears on the display.

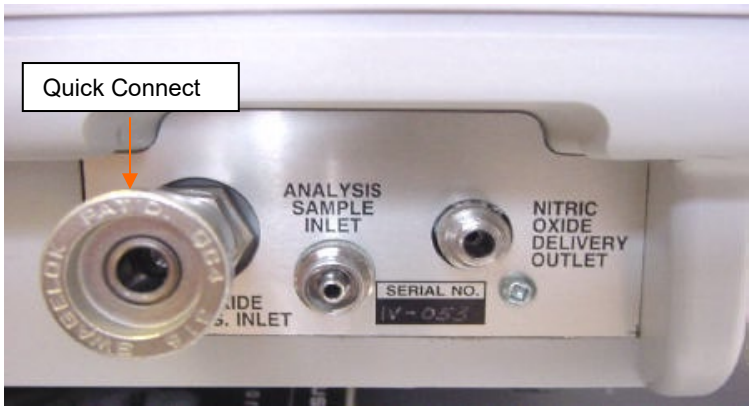

Figure 4-16 GAS CONNECTORS

4.5. <u>To **leak check** the AeroNOx under test, proceed as follows</u>:

4.5.1. Attach the braided SS hose with the male quick connects to the regulator on the Nitric Oxide cylinder and to the quick connect on the AeroNOx (shown in Figure 4-16).

4.5.2. Attach one end of the Delivery Line to the fitting labeled NITRIC OXIDE DELIVERY OUTLET (refer to Figure 4-16).

4.5.3. Attach the other end of the Delivery Line to a gas scavenger or vent.

4.5.4. Open the valve on the Nitric Oxide cylinder. The regulator gauge should indicate cylinder pressure between 500 and 2200 psi. If a regulator other than P/N 731-9142 is used, ensure that the outlet pressure used is 45 - 65 psi.

4.5.5. Turn the MFM (mass flow meter) knob in the AeroNOx counterclockwise until the “NITRIC OXIDE LPM” display reads at least 0.5 Lpm. Document the reading on the attached quality record form.

4.5.6. Lock the clamp onto the delivery line to completely restrict the flow. The MFM reading should drop back to ~”0.00”.

4.5.7. Keep the locking clamp in place while testing the fittings in the delivery circuit for leakage using the sampling line attached to the other AeroNOx. Begin with the Quick Connect and trace the delivery path past the metering valve into the MFM, through the solenoid valves, back to the MFM, then to the fitting on the manifold just above the O_2 sensor, and finally to the fitting labeled NITRIC OXIDE DELIVERY OUTLET (shown in Figure 4-16). **Hold the sample line by each connection for at least 30 seconds** to check for leaks. If there is no leakage, the NO reading on the AeroNOx to which the sampling line has been attached will remain at “0”. Readings other than “0” indicate a leak problem which must be corrected either by tightening the fittings or by re-plumbing, depending on where the leak is detected.

4.5.8. When leak testing has been completed, release the locking clamp and again observe the NITRIC OXIDE flow display on the front panel. The reading should again climb rapidly to the same value as that documented in Step 4.5.5. If it does not, there is a leak in the system that that you have either failed to detect or to correct.

4.6. Once the AeroNOx has tested as leak free, **check and calibrate MFM flow** as follows.

4.6.1. Disconnect the SS hose to stop gas delivery and then replace the original delivery line with the one that has been modified for use with the flow calibrator. Ensure that it is firmly connected to both the AeroNOx and the flow calibrator.

4.6.2. Reconnect the SS hose to the AeroNOx.

4.6.3. To ensure that the MFM is registering expected nitric oxide gas flow as it should, turn the MFM knob in the AeroNOx counterclockwise until it is fully open and observe the NITRIC OXIDE flow display on the front panel. The reading should climb rapidly. **The minimum allowable indicated flow is 2.00 lpm.**

4.6.4. Document the actual flow reading observed on the NITRIC OXIDE flow display and proceed to 4.6.7. If there is no flow, proceed to 4.6.5. If there is insufficient flow, proceed to 4.6.6.

4.6.5. If there is **no flow** (i.e. the reading on the display remains at ~"0.00" and does not climb), proceed as follows.

4.6.5.1. Confirm that the MFM valve is completely open, the delivery line is not kinked or obstructed, the hose with quick connects is completely engaged, and the valve on the nitric oxide cylinder is open.

4.6.5.2. Confirm that wires on the solenoid valve power cables have not pulled loose or out of the connectors, and that these cables have been plugged in correctly (i.e. completely seated, polarity correct, connected to the specified header [connector with the green / white wires connected to J17 on the main board; connector with the red / black wires connected to J18 on the main board]).

4.6.5.3. Confirm that the unit has been plumbed as specified below and that tubing has not become disconnected.

- Tubing from Port 1 of the "shut-off" solenoid valve connects to the fitting at the end of the MFM.
- Tubing from Port 3 of the "diverter" solenoid valve connects to the fitting just above the O_2 sensor.
- Tubing from Port 1 of the "diverter" solenoid valve is vented to the open hole in the AeroNOx case bottom.

4.6.5.4. If there is still no flow, call International Biomedical and arrange to have the AeroNOx returned for servicing.

4.6.6. If there is **not enough flow** (i.e. the display does not register at least **2.00 lpm** even though the knob on the metering valve has been turned fully counterclockwise and the valve on the Nitric Oxide gas cylinder is open), call International Biomedical and arrange to have the AeroNOx returned for servicing.

4.6.7. When you have established that there is sufficient nitric oxide flow through the delivery circuit, **calibrate MFM flow at 2.00 lpm**.

NOTE: The MFM is linear and is specified to deliver up to 2.00 lpm (± 5%). So if it is calibrated accurately at the specified 2.00 lpm, it should be within the ± 100 ml/min parameters at all points on the scale from 0.02 lpm through 2.0 lpm.

To calibrate the MFM, proceed as follows.

4.6.7.1. Ensure that the MFM has been zeroed as specified in Step 4.3. If necessary, zero again.

4.6.7.2. Adjust the MFM knob on the AeroNOx until the flow calibrator read out indicates 2000 cc/min (± 5 cc).

4.6.7.3. Then use the calibration screwdriver to adjust potentiometer R48 on the AeroNOx circuit board (shown in Figure 4-17) until the NITRIC OXIDE LPM display reads "2.00".

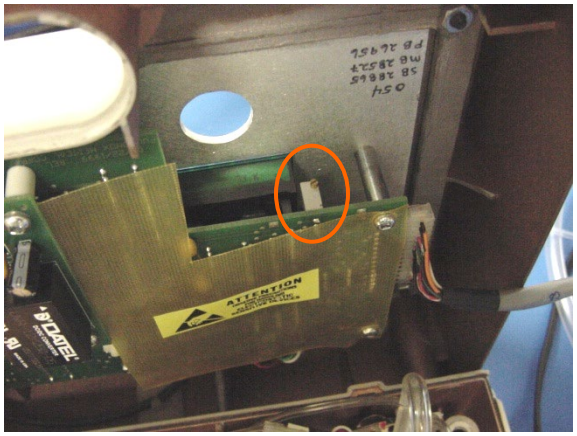

Figure 4-17 NITRIC OXIDE LPM DISPLAY POTENTIOMETER

4.6.7.4. Record the AeroNOx NITRIC OXIDE LPM display reading and the flow calibrator reading on the service report or on the attached record form.

4.6.7.5. Now, confirm that the MFM is linear and within specification by measuring flow at pre-established nominal flow settings from 2.0 lpm through 0.02 lpm. (The pre-established nominal flow settings have been determined by flow levels typically required in clinical situations.)

To do so, proceed as follows and document AeroNOx NITRIC OXIDE LPM display and flow calibrator readings on the attached record form.

If you are using a mini-Buck flow calibrator, remember to press the “ON” button between readings to reset the calibrator averaging function.

4.6.7.5.1. Adjust the MFM knob on the AeroNOx until the NITRIC OXIDE LPM display reads “1.00” and document this reading and the flow as measured by the flow calibrator in the attached chart.

4.6.7.5.2. Repeat this for every set point in the attached chart. If flow has been calibrated and checked at all nominal flow settings within the past three months, check flow at 2.00 lpm, at 0.02 lpm and at one other point selected at random to confirm that MFM flow is still with the specified parameters (± 100 ml).

4.6.7.5.3. When flow has been measured at the required nominal set points, calculate the difference between the flow registered by the NITRIC OXIDE flow display and the flow as measured by the flow calibrator to ensure that MFM flow is within the specified parameters (± 100 ml).

4.7. MFM Flow Check / Plumbing Leak Test procedure is complete. Proceed as follows.

4.7.1. Shut off gas flow from the nitric oxide cylinder.

4.7.2. Disconnect the SS braided hose and the delivery line from the AeroNOx under test.

4.7.3. Adjust Sample Flow Rate as per the *AeroNOx Sample Rate Adjustment Procedure*

NOTE: If sample flow cannot be adjusted as specified, clean the pump as described in the Pump Cleaning Procedure.

4.7.4. Power the AeroNOx off and reseal the unit with the four Phillips head screws removed in Step 4.2. Be careful not to pinch wires or tubing between the enclosure top and bottom.

4.7.5. Reconnect the power supply and calibrate the AeroNOx as per the procedure in Section V of the AeroNOx Operating Manual.

4.7.6. Document all servicing and test activities for the AeroNOx in the event that further troubleshooting is required from your AeroNOx representative.

international BIOMEDICAL

AeroNOx MFM Flow Check / Plumbing Leak Test Record for AeroNOx S/N _____

1. Record the tool control number and calibration date for the following:

   Flowmeter / Flow Calibrator Tool # _____ Cal. Due Date _____

2. MFM has been zeroed as specified. ☐ Yes ☐ No

3. a) NO flow reading as per Step 4.5.5. _____

   b) AeroNOx has passed leak testing as specified. ☐ Yes ☐ No

4. When the MFM valve is fully open, the NITRIC OXIDE display reads _____ (min. 2.00 lpm).

5. Indicate which of the following is required:

   a) MFM calibration at 2.00 lpm and flow check all settings required. ☐ Yes ☐ No

   b) Flow check at 2.00 lpm, 0.02 lpm, and only one other setting because calibration and full check were last performed _____.
   Date

6. Record MFM flow check / calibration data in the chart below:

Nominal Flow Setting in lpm	AeroNOx Reading (lpm)	Flow Calibrator Reading (cc/ml per min)	Calculated Difference in ml	Pass Criteria 2.00 lpm (± 5%) = (± 100 ml)
2.00				
1.00				
0.40				
0.30				
0.20				
0.10				
0.05				
0.02				

7. MFM flow is within the specified parameters at all required nominal flow settings.
   ☐ Yes ☐ No

Completed by: _____ (signature of technician)

Date: _____

SECTION 5

DIAGRAMS

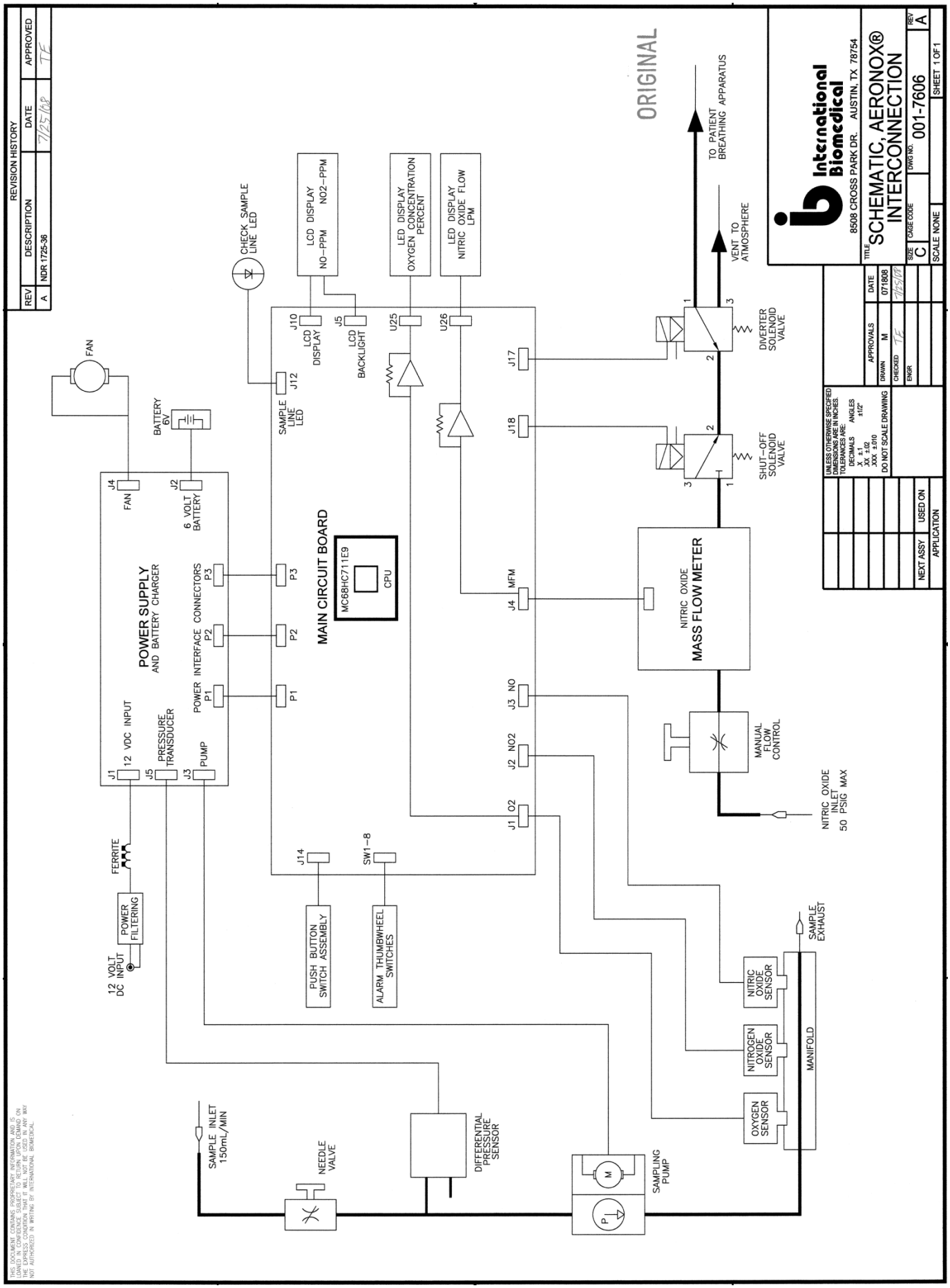
REVISION HISTORY
REV
DESCRIPTION
DATE
APPROVED
A
NDR 1725-36
7/25/08
TF
ORIGINAL
International Biomedical
8508 CROSS PARK DR. AUSTIN, TX 78754
TITLE
SCHEMATIC, AERONOX® INTERCONNECTION
SIZE C
CAGE CODE
DWG NO. 001-7606
REV A
SCALE NONE
SHEET 1 OF 1
APPROVALS
DATE
DRAWN M 071808
CHECKED
ENGR
UNLESS OTHERWISE SPECIFIED DIMENSIONS ARE IN INCHES. TOLERANCE ARE:
DECIMALS X ±1 XX ±.02 XXX ±.010
ANGLES ±1/2°
DO NOT SCALE DRAWING
NEXT ASSY
USED ON
APPLICATION
THIS DOCUMENT CONTAINS PROPRIETARY INFORMATION AND IS LOANED IN CONFIDENCE SUBJECT TO RETURN UPON DEMAND ON THE EXPRESS CONDITION THAT IT WILL NOT BE USED IN ANY WAY NOT AUTHORIZED IN WRITING BY INTERNATIONAL BIOMEDICAL.
TO PATIENT BREATHING APPARATUS
VENT TO ATMOSPHERE
DIVERTER SOLENOID VALVE
SHUT-OFF SOLENOID VALVE
NITRIC OXIDE MASS FLOW METER
MANUAL FLOW CONTROL
NITRIC OXIDE INLET 50 PSIG MAX
SAMPLE EXHAUST
MANIFOLD
NITRIC OXIDE SENSOR
NITROGEN OXIDE SENSOR
OXYGEN SENSOR
SAMPLING PUMP
DIFFERENTIAL PRESSURE SENSOR
NEEDLE VALVE
SAMPLE INLET 150mL/MIN
MAIN CIRCUIT BOARD
MC68HC711E9
CPU
J17
J18
MFM
J4
NO
J3
NO2
J2
O2
J1
U25
U26
J10
LCD DISPLAY
J5
LCD BACKLIGHT
J12
SAMPLE LINE LED
CHECK SAMPLE LINE LED
LCD DISPLAY NO-PPM NO2-PPM
LED DISPLAY OXYGEN CONCENTRATION PERCENT
LED DISPLAY NITRIC OXIDE FLOW LPM
J14
SW1-8
PUSH BUTTON SWITCH ASSEMBLY
ALARM THUMBWHEEL SWITCHES
POWER SUPPLY AND BATTERY CHARGER
J1 12 VDC INPUT
J5 PRESSURE TRANSDUCER
J3 PUMP
POWER INTERFACE CONNECTORS
P1
P2
P3
J4 FAN
J2 6 VOLT BATTERY
FAN
BATTERY 6V
FERRITE
POWER FILTERING
12 VOLT DC INPUT

REVISION			
REV	ECO	DATE	APP
A	NDR 1725-13	0318 08	RR

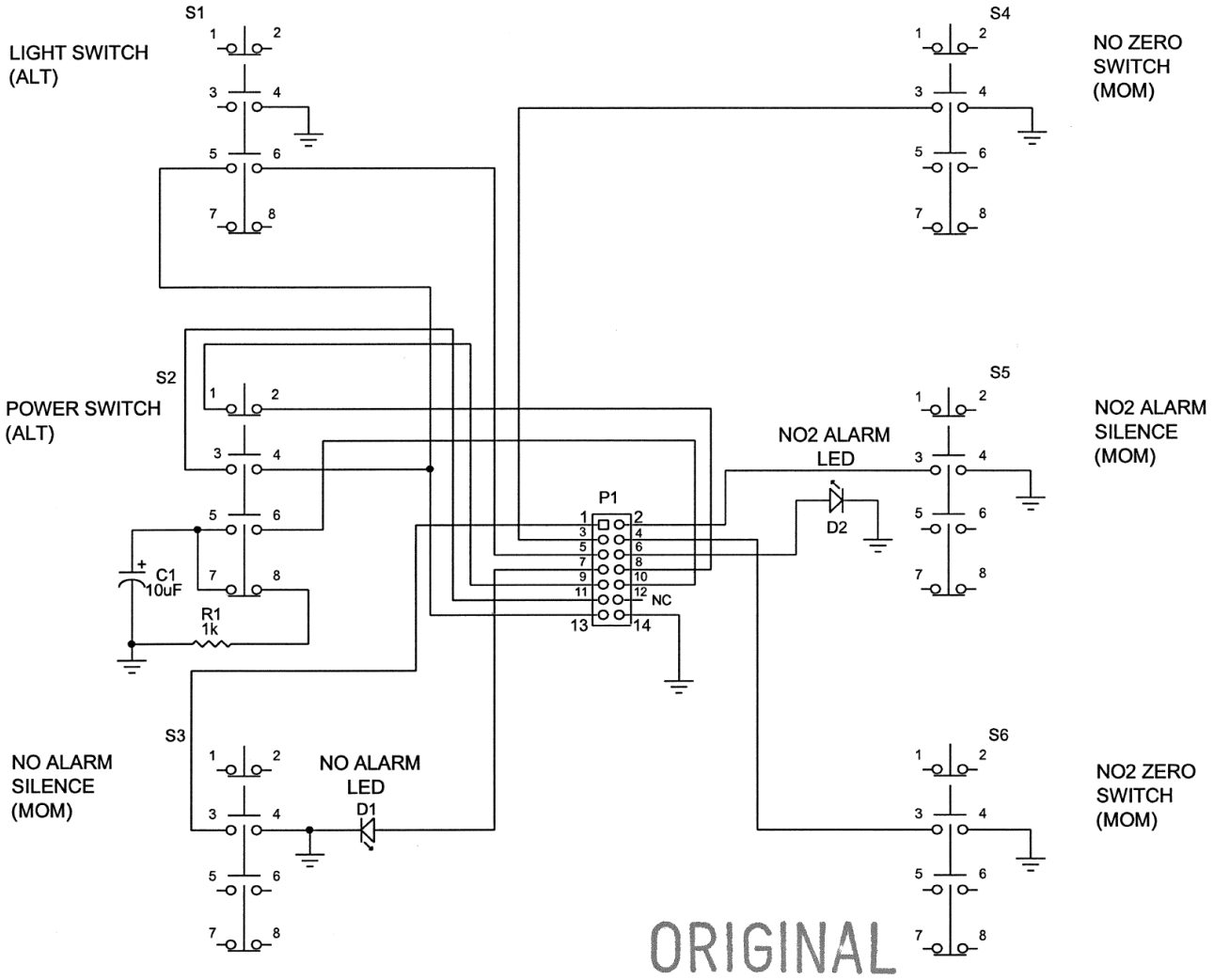

		00-200014		
357-7600	AeroNOx®	ENGR	RR	021308
NXT ASY	USED ON	CHECK		
APPLICATION		ORIG	RJR	021308

International Biomedical

8508 Cross Park Drive

Austin, Texas, 78754

TITLE

SCHEMATIC, PCBA, SWITCHBOARD, AERONOX

SIZE **A**	DOC NO **001-7600**	REV **A**
SCALE **NONE**	SHEET **1** OF **1**	

NOTES:
1. R17 SETS PUMP SPEED. IF POT IS TURNED PAST THE POINT WHERE SPEED INCREASES, PUMP WILL NOT SHUT OFF.
2. R24 SETS PUMP CUT-OFF POINT WHEN OPERATING WITH A PRESSURE TRANSDUCER.
3. R25, R26, OFFSET ADJUST, MAY NOT BE REQUIRED WITH ALL PRESSURE TRANSDUCERS.
4. ALL RESISTORS ARE ± 1% TOLERANCE UNLESS OTHERWISE INDICATED.

REVISION

REV	ECO	DATE	APP
A	NDR 1725-17	05/05/08	RR
B	11287	11/11/08	RK

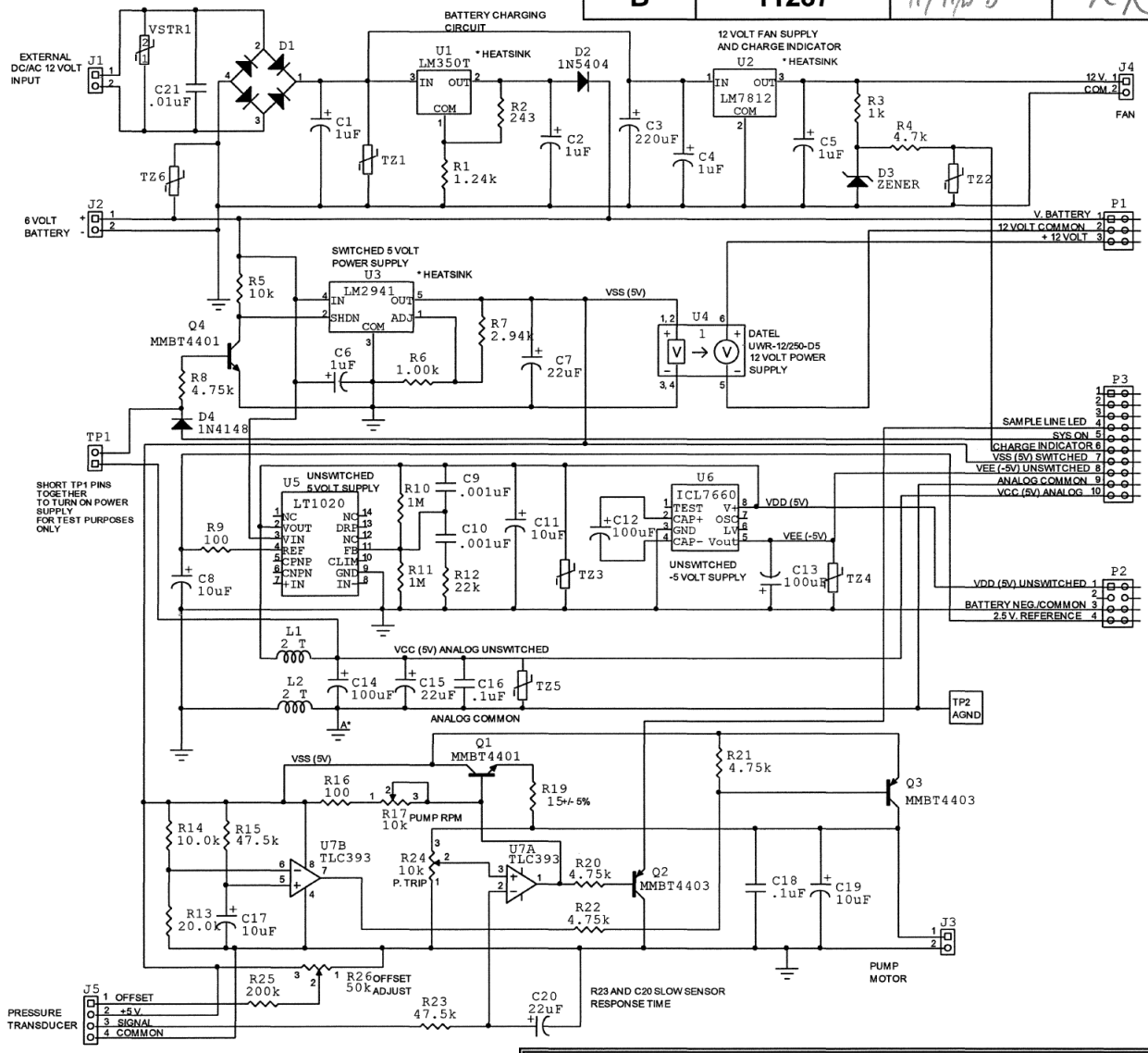

		00-350016R1-3		
357-7604	AeroNOx	ENGR	RR	022908
NXT ASY	USED ON	CHECK		
APPLICATION		ORIG	RJR	022908

International Biomedical ORIGINAL

8508 Cross Park Drive

Austin, Texas 78754

TITLE **Schematic, PCBA, Power Supply, AeroNOx**

SIZE **A**	DOC NO **001-7604**	REV **B**
SCALE **NONE**	SHEET **1** OF **1**	

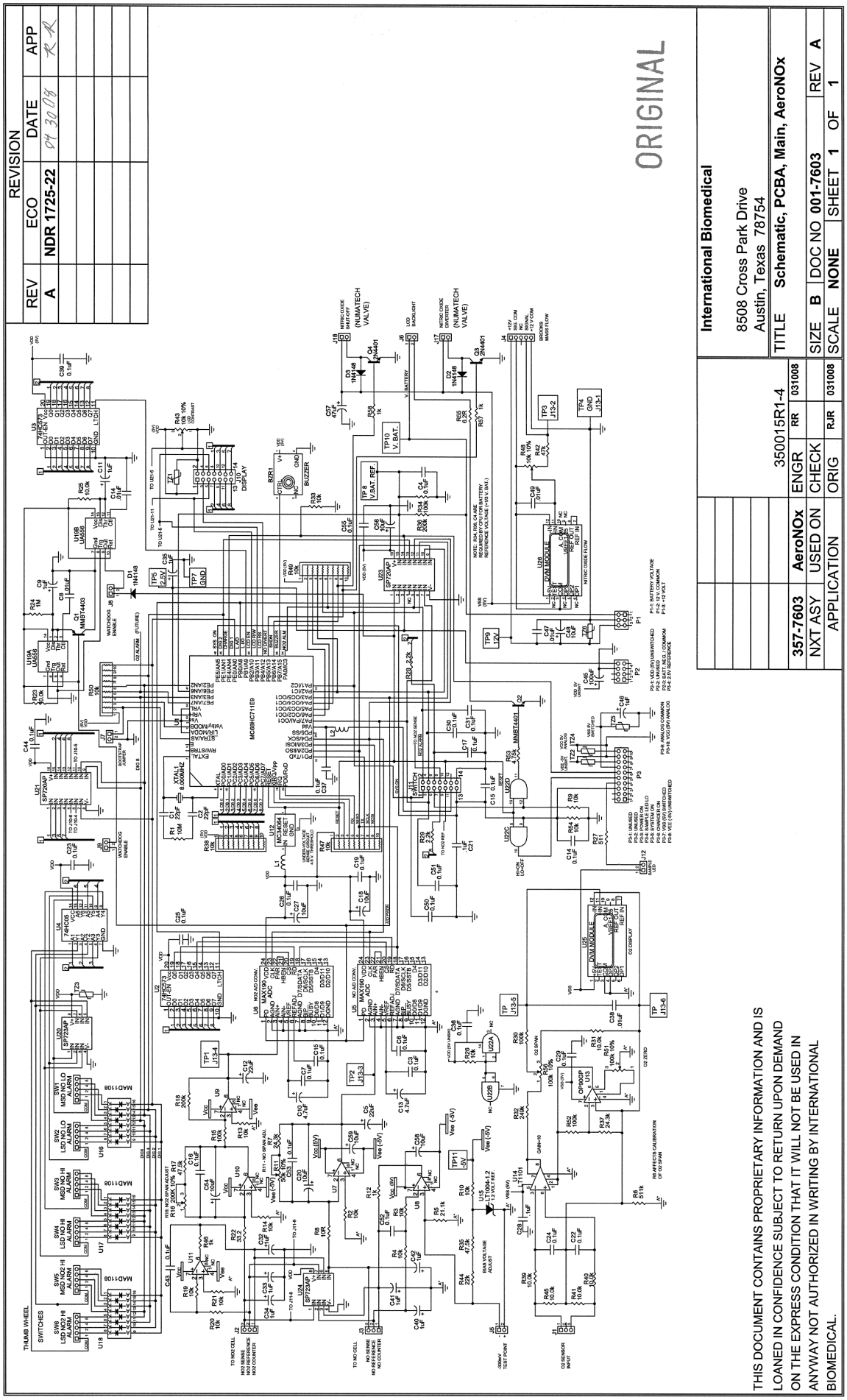
REVISION
REV ECO DATE APP
A NDR 1725-22 04 30 08 R R
ORIGINAL
International Biomedical
8508 Cross Park Drive
Austin, Texas 78754
TITLE Schematic, PCBA, Main, AeroNOx
SIZE B DOC NO 001-7603 REV A
SCALE NONE SHEET 1 OF 1
350015R1-4
357-7603 AeroNOx ENGR RR 031008
NXT ASY USED ON CHECK
APPLICATION ORIG RJR 031008
THUMB WHEEL SWITCHES
MC68HC711E9
MAX190
MAX264
SP720AP
SP723AP
74HC05
74HC573
MAX232
MAX4164
MMBT4403
MMBT4401
1N4148
2N4401
NITRIC OXIDE SHUT-OFF (NUMATECH VALVE)
NITRIC OXIDE DIVERTER (NUMATECH VALVE)
BROOKS MASS FLOW
O2 DISPLAY
O2 ZERO
O2 SPAN
O2 SENSOR INPUT
NO2 SENSE
NO2 SENSOR
NO2 COUNTER
TO NO2 CELL
TO NO CELL
-300mV TEST POINT
BIAS VOLTAGE ADJUST
R8 AFFECTS CALIBRATION OF O2 SPAN
THIS DOCUMENT CONTAINS PROPRIETARY INFORMATION AND IS LOANED IN CONFIDENCE SUBJECT TO RETURN UPON DEMAND ON THE EXPRESS CONDITION THAT IT WILL NOT BE USED IN ANYWAY NOT AUTHORIZED IN WRITING BY INTERNATIONAL BIOMEDICAL.

REVISION			
REV	ECO	DATE	APP
A	NDR 1725-13	021908	RR

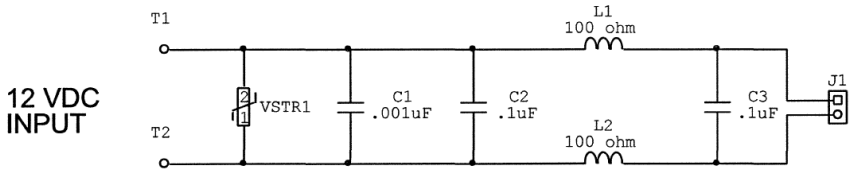

AERONOX INPUT POWER FILTER

ORIGINAL

		PulmoNOx Part No. 350017		
357-7602	AeroNOx®	ENGR	RR	021308
NXT ASY	USED ON	CHECK		
APPLICATION		ORIG	RJR	021308

International Biomedical

8508 Cross Park Drive

Austin, Texas, 78754

TITLE

SCHEMATIC, PCBA, POWER FILTER, AERONOX

SIZE **A**	DOC NO **001-7602**	REV **A**
SCALE **NONE**	SHEET **1** OF **1**	

SECTION 6

PARTS LIST

Item No.	Qty.	International Biomedical Part No.	Description
1	1	416-0013	Assembly, Main Circuit Board, AeroNOx
2	1	357-7603	PCBA, Main, AeroNOx
3	1	357-7604	PCBA, Power Supply AeroNOx
4	1	416-0005	Assembly, LCD, AeroNOx
5	1	307-9002	AeroNOx Microcontroller V 2.0
6	2	226-2001	Datel Digital LED Panel Meter
7	1	357-7600	PCBA, Switch Board, AeroNOx
8	1	731-9376	O_2 Cal Pot Cable Assembly
9	1	731-9378	NO Cal. Pot. Cable Assembly
10	1	731-9377	NO_2 Cal Pot Cable Assembly
11	1	416-0000	AeroNOx Check Sample Line
12	1	416-0011	Assembly, Front Panel, AeroNOx IV
13	1	416-0012	AeroNOx Thumbwheel Switch Assembly
14	1	357-7602	PCBA, Power Line Filter, AeroNOx
15	1	416-0006	EFC Assembly, AeroNOx, with Beswick Fittings
16	1	357-7601	PCBA, Sensor NO or NO_2 AeroNOx
17	1	416-0007	AeroNOx Pressure Sensor Assembly
18	1	358-0195	Pump Assembly, AeroNOx
19	1	416-0008	Assembly, Enclosure, AeroNOx IV
20	1	416-0009	Assembly, Valve, Shut-Off / Diverter, AeroNOx IV
21	1	231-8003	Cable, Ground, AeroNOx Filter Board
22	1	231-8000	Ground Cable, Porter Valve, AeroNOx
23	1	231-8001	Ground Cable, Top Cover, AeroNOx
24	1	231-8004	Cable Assembly, Input Power / Battery, AeroNOx
25	1	231-8005	Cable, Diverter / Shut-Off Valve, AeroNOx
26	1	231-8006	Cable Assembly, Pressure Sensor / Pump, AeroNOx
27	1	231-8007	Cable, Sensor / MFM, AeroNOx
28	1	888-0115	AeroNOx Rechargeable Battery Assembly
29	1	293-0040	Power Supply Assembly, 12 V, AeroNOx
30	1	711-0179	Power Cord, AeroNOx
31	1	715-7001	AeroNOx Technical Manual
32	1	715-7000	AeroNOx Operating Manual
33	1	731-9138	Assembly, AeroNOx
34	1	236-5003	Lid, Avian Case
35	1	284-1000	Gasket, Sensor
36	1	357-7605	PCBA, NO_2 Relay Switch Modification Work Instructions
37	1	415-0000	AeroNOx Calibration Circuit
38	1	416-0010	Calibration Screwdriver, Single
39	1	731-9379	AeroNOx Power Supply Fan
40	1	316-2000	Detent Knob, Black
41	1	352-7000	Valve, Shaft, AeroNOx
42	1	382-2000	Needle Valve, Elbow Body, 10/32 Thread
43	1	382-2001	Valve, Porter, Control, High-Resolution
44	1	390-1001	Electronic Flow Meter, Brooks, 0 - 5 V
45	1	317-1000	Hardware Kit, AeroNOx Case
46	1	700-0600	Oxygen Sensor, AeroNOx

Item No.	Qty.	International Biomedical Part No.	Description
47	1	700-0601	Nitric Oxide Sensor, AeroNOx
48	1	700-0602	Nitrogen Dioxide Sensor, AeroNOx
49	1	731-9142	Delivery Regulator with CGA 626 Fitting
50	1	731-9371	Hose, AeroNOx, 3 Foot
51	1	731-9373	AeroNOx “NO Worries” Connector Sample Pak

SECTION 7

APPENDIX

3NF/F CiTiceL

Performance Characteristics

Nominal Range	0-1000ppm
Maximum Overload	5000ppm
Inboard Filter	To remove effect of SO_2 in flue stream
Expected Operating Life	Three years in air
Output Signal	0.10 ± 0.02 μA/ppm
Resolution	1ppm
Operating Temperature Range *see Note1	-20°C to +40°C
Pressure Range	Atmospheric ± 10%
Pressure Coefficient	0.01% signal/mBar
T_{90} Response Time	≤25 seconds
Relative Humidity Range	15 to 90% non-condensing
Typical Baseline Range (pure air)	0 to +12ppm equivalent
Maximum Zero Shift (+20°C to +40°C)	30ppm equivalent
Long Term Output Drift	<2% signal loss/month
Recommended Load Resistor	10 Ω
Bias Voltage	+300mV
Repeatability	2% of signal
Output Linearity	Linear

Note1: While not being used to measure NO the 3NF/F can withstand temperatures of up to +50°C

N.B. All performance data is based on conditions at 20°C, 50%RH, and 1013mBar

Outline Dimensions

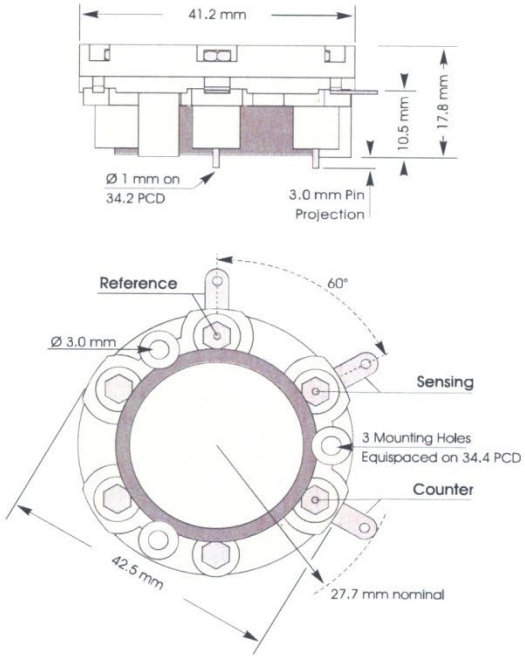

All tolerances ±0.15mm unless otherwise stated.
3NF/F shown with side tags and tin pins.
Do not solder to pin connections

Physical Characteristics

Weight	22g
Position Sensitivity	None
Storage Life	Six months in CTL container
Recommended Storage Temperature	0-20°C
Warranty Period	12 months from date of despatch

Doc. Ref.: 3NFF.p65
Issue 3.5 June 24, 2000

City Technology Ltd, City Technology Centre, Walton Rd, Portsmouth PO6 1SZ, UK
Tel:+44 23 9232 5511, Fax:+44 23 9238 6611, sensors@citytech.co.uk, www.citytech.com

Temperature Dependence

The output of a CiTiceL can vary with temperature. The graph here shows the variation in output with temperature for 3NF/F CiTiceLs based on a sample of about 16 sensors. The results are shown in the graph as a mean for the batch, and expressed as a percentage of the signal at 20°C.

From a statistical viewpoint, for a sample of this size, the range in values observed for all sensors of this type will fall within a range three times the standard deviation above or below the mean. Assuming therefore this sample is typical, then the temperature behaviour of all 3NF/F CiTiceLs will fall in the band +3SD to -3SD.

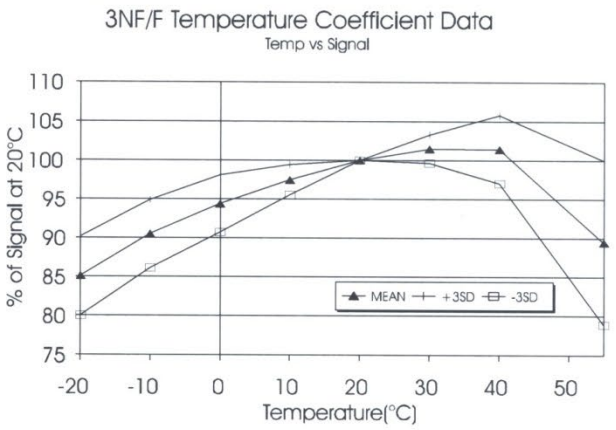

Cross-sensitivity Data

CiTiceLs may exhibit a response to certain gases in a sample other than the target gas. The table below shows the typical response of 3NF/F sensors to a number of common cross-interfering gases. The figures are expressed as a percentage of the primary sensitivity (i.e. nitric oxide = 100%).

Gas	Response	Gas	Response
Carbon monoxide:	0	**Hydrogen:**	0
Hydrogen sulphide:	0	**Hydrogen chloride:**	<5
Sulphur dioxide:	0	**Ethylene:**	0
Nitrogen dioxide:	<10		

** For details of other possible cross-interfering gases contact City Technology.**

Ordering Information

The 3NF/F Nitric Oxide CiTiceL is available with side tags, gold-plated PCB pins, or both PCB pins and side tags. To ensure the appropriate option is supplied care must be taken to provide the correct code when ordering.

Type 3NF/F:- With side tag and PCB pin connections - **3NF/F**
With side tag connection - **3NF/F(S)**
With gold-plated PCB pin connection - **3NF/F(G)**

Also available with bias board - 3BNF/F

Every effort has been made to ensure the accuracy of this document at the time of printing. In accordance with the company's policy of continued product improvement City Technology Limited reserves the right to make product changes without notice. No liability is accepted for any consequential losses, injury or damage resulting from the use of this document or from any omissions or errors herein. The data is given for guidance only. It does not constitute a specification or an offer for sale. The products are always subject to a programme of improvement and testing which may result in some changes in the characteristics quoted. As the products may be used by the client in circumstances beyond the knowledge and control of City Technology Limited, we cannot give any warranty as to the relevance of these particulars to an application. It is the clients' responsibility to carry out the necessary tests to determine the usefulness of the products and to ensure their safety of operation in a particular application.
Performance characteristics on this data sheet outline the performance of newly supplied sensors. Output signal can drift below the lower limit over time.

Nitrogen dioxide CiTiceL® Specification

3NDH CiTiceL®

Performance Characteristics

Nominal Range	0-20ppm
Maximum Overload	300ppm
Expected Operating Life	Two years in air
Output Signal	1.40 ± 0.30 μA/ppm
Resolution	0.1ppm
Temperature Range	-20°C to +50°C
Pressure Range	Atmospheric ± 10%
Pressure Coefficient	No data
T_{90} Response Time	<40 seconds
Relative Humidity Range	15 to 90% non-condensing
Typical Baseline Range (pure air)	-0.1 to 0.1ppm equivalent
Maximum Zero Shift (+20°C to +40°C)	0.2ppm equivalent
Long Term Output Drift	<2% signal loss/month
Recommended Load Resistor	33Ω
Bias Voltage	Not required
Repeatability	2% of signal
Output Linearity	Linear

N.B. All performance data is based on conditions at 20°C, 50%RH, and 1013mBar

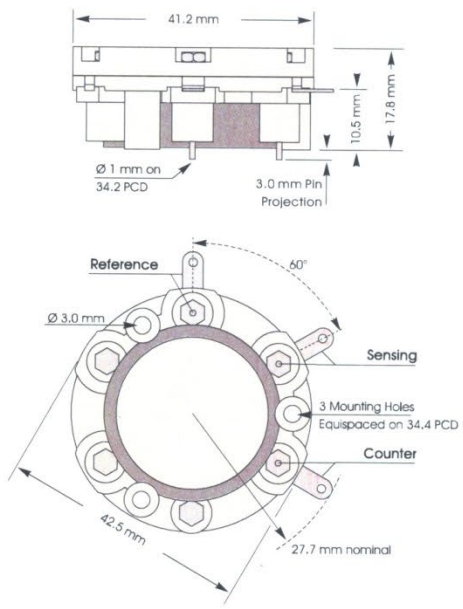

All tolerances ±0.15mm unless otherwise stated.
Sensor shown with side tags and gold pins.
Do not solder to pin connections

Physical Characteristics

Weight	22g
Position Sensitivity	None
Storage Life	Six months in CTL container
Recommended Storage Temperature	0-20°C
Warranty Period	12 months from date of despatch

Doc. Ref.: 3NDH.p65
Issue 4.5 Oct 20,2000

City Technology Ltd, City Technology Centre, Walton Rd, Portsmouth PO6 1SZ, UK
Tel:+44 23 9232 5511, Fax:+44 23 9238 6611, sensors@citytech.co.uk, www.citytech.com

Temperature Dependence

The output of a CiTiceL can vary with temperature. The graph here shows the variation in output with temperature for 3NDH CiTiceLs based on a sample of about 16 sensors. The results are shown in the graph as a mean for the batch, and expressed as a percentage of the signal at 20°C.

From a statistical viewpoint, for a sample of this size, the range in values observed for all sensors of this type will fall within a range three times the standard deviation above or below the mean. Assuming therefore this sample is typical, then the temperature behaviour of all 3NDH CiTiceLs will fall in the band +3SD to -3SD.

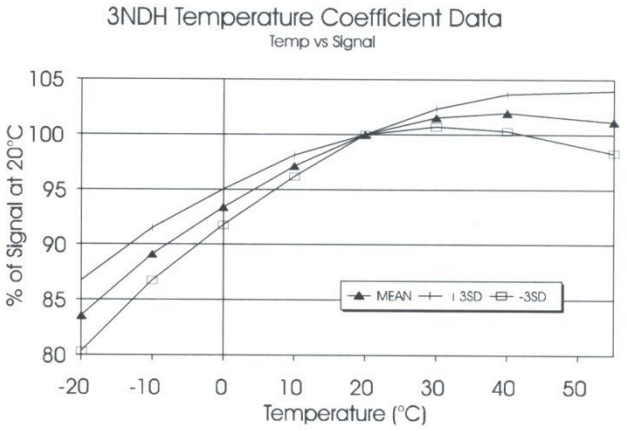

Cross-sensitivity Data

CiTiceLs may exhibit a response to certain gases in a sample other than the target gas. 3NDH CiTiceLs have been tested with a number of commonly cross-interfering gases and the results are given below. The table shows the typical response to be expected from a sensor when exposed to a given test gas concentration (relevant to safety, e.g. TLV levels).

Gas	Conc.	3NDH	Gas	Conc.	3NDH
Carbon monoxide:	300ppm	0ppm	**Hydrogen:**	100ppm	0ppm
Hydrogen sulphide:	15ppm	-1.5≤ x ≤0ppm	**Hydrogen cyanide:**	10ppm	0ppm
Sulphur dioxide:	5ppm	-0.05≤ x ≤0ppm	**Hydrogen chloride:**	5ppm	0ppm
Nitric oxide:	35ppm	0ppm	**Ethylene:**	100ppm	0ppm
Chlorine:	1ppm	≈1ppm			

For details of other possible cross-interfering gases contact City Technology.

Ordering Information

The 3NDH Nitrogen Dioxide CiTiceL is available with side tags, gold-plated PCB pins, or both PCB pins and side tags. To ensure the appropriate option is supplied care must be taken to provide the correct code when ordering.

Type 3NDH:- With side tag and PCB pin connections - **3NDH**
With side tag connection - **3NDH(S)**
With gold-plated PCB pin connection - **3NDH(G)**

Every effort has been made to ensure the accuracy of this document at the time of printing. In accordance with the company's policy of continued product improvement City Technology Limited reserves the right to make product changes without notice. No liability is accepted for any consequential losses, injury or damage resulting from the use of this document or from any omissions or errors herein. The data is given for guidance only. It does not constitute a specification or an offer for sale. The products are always subject to a programme of improvement and testing which may result in some changes in the characteristics quoted. As the products may be used by the client in circumstances beyond the knowledge and control of City Technology Limited, we cannot give any warranty as to the relevance of these particulars to an application. It is the clients' responsibility to carry out the necessary tests to determine the usefulness of the products and to ensure their safety of operation in a particular application.
Performance characteristics on this data sheet outline the performance of newly supplied sensors. Output signal can drift below the lower limit over time.

RECOMMENDED PRACTICES FOR HANDLING OF GAS CYLINDERS AND REGULATORS TO MAINTAIN GAS QUALITY

Any time a regulator is installed on a tank or cylinder of compressed gas, certain precautions must be followed to prevent contamination of the gas in the tank with the air that is trapped in the dead space of the regulator. This dead space is composed of the volume of the nipple on the regulator that attaches to the valve on the tank, the volume of the valve on the tank exposed to air, that is not displaced by the nipple on the regulator when it is attached to the valve, and any volume in the high pressure side of the regulator.

Whenever a regulator is attached to a cylinder, it must be purged before use. The valve on the tank must not be opened and left open until the regulator is purged. The reason for this being, as soon as the valve is opened, the dead space described above becomes common with the tank. Any air or gas in this dead space will now diffuse into the tank, contaminating the contents.

The major concern with nitric oxide is that the oxygen in the air that is trapped in the dead space will unite with the nitric oxide to produce nitrogen dioxide. Each molecule of oxygen will convert two molecules of nitric oxide to nitrogen dioxide. Although the dead space volume is physically small, it carries sufficient oxygen to convert a significant amount of nitric oxide to nitrogen dioxide. This chemical reaction will have the effect of reducing the concentration of the nitric oxide and increasing the concentration of nitrogen dioxide. The levels of nitric oxide in the cylinders are quite low, typically less than 800 ppm and often 80 ppm for calibration gases.

On low concentrations in small tanks, just one regular installation without following proper purging technique can almost make the tank unusable.

Presented here are three methods of suggested practice to minimize contamination of cylinders. The first two are practiced by NIST, the first being the most desirable method. The third method is a next best solution that should give good results out in the field when a laboratory environment is not available.

Purge Method 1: (BEST)

1. Install a shut-off valve on output of regulator.
2. Install and tighten the regulator onto tank.
3. Connect vacuum source to shut-off valve.
4. Open regulator so it will allow flow.
5. Open the shut-off valve and pull vacuum on regulator. If the gauge will indicate vacuum, draw down to 30 in/Hg.
6. Close shut-off valve.
7. Crack tank valve open and immediately close.
8. Open shut-off valve and pull down to 30 in/Hg again. Close shut-off valve.
9. Repeat steps 7 and 8 two more times.
10. Crack valve and immediately close.
11. Open shut-off valve and draw down to 0 in/Hg. Close shut-off valve.
12. Repeat steps 10 and 11 once more.
13. Tank valve may now be opened and left open.
14. Remove vacuum source.
15. The regulator is now purged and ready for use.

Purge Method 2:

1. Install a shut-off valve on output of regulator.
2. Install and tighten the regulator onto tank.
3. Open regulator to allow flow through it.
4. Close shut-off valve.
5. Crack and immediately close the tank valve.
6. Open shut-off valve and bleed pressure to 0, preferably to an external vent. Close shut-off valve.
7. Repeat steps 5 and 6 four more times.
8. The tank valve may now be left open as needed.
9. The regulator is now purged and ready to use.

Purge Method 3:

1. Install and tighten regulator onto tank.
2. Open regulator to allow flow through it.
3. Crack open and immediately close tank valve and allow regulator to bleed down to 0, venting the gas to atmosphere.
4. Repeat step 3 at least 5 more times to ensure that all air has been purged from regulator.
5. Connect to equipment and open the tank valve as needed.

Although not as elaborate as the previous two methods, this is far better than typical practice of attaching a regulator, opening the tank valve, and starting to use it. Once a regulator is installed on a tank, it should be left on the tank until the tank is empty to minimize the chance of tank contamination.

CONTAMINATION EFFECTS OF AIR ON NO_2 FORMATION IN NO/N_2

Sample calculations to indicate the significance of contamination due to inadequate purging procedures:

LARGE 2040 LITER (SIZE 2R) TANKS:

2040 Liter cylinder, 800 ppm NO in N_2 @ 2000 psi

Contains 1632 ml of NO, balance N_2.

1 molecule of O_2 will convert 2 molecules of NO to NO_2.

Volume of air trapped between tank valve and regulator body is typically 1.25 ml or more. Conceivably, and additional 0.75 ml could be contained in the regulator body for a total of 2 ml.

Internal dimensions of regulator nipple: 0.18” dia × 3.1” long = 0.079 in^3 = 1.29 ml
Internal dimensions of regulator nipple: 0.18” dia × 3.5” long = 0.089 in^3 = 1.46 ml

Assuming 21% Oxygen in air, (.21 × 2 ml) = 0.42 ml of Oxygen will be available.

This can convert 0.84 ml of NO to NO_2.

0.84 ml represents [(0.84 / 1632) × 100]% = 0.05% of the NO present in the tank.

0.05% of 800 ppm is 0.4 ppm.

Each time a regulator is mounted on a tank and not properly purged, the concentration of NO could be reduced by 0.4 ppm by diffusion of the Oxygen back into tank through the valve.

Conversely, NO_2 concentration could increase by 0.4 ppm each time.

As a tank empties, for example at 1000 psi, with 816 ml of NO left in the tank, 0.84 ml now represents [(0.84 / 816) × 100]% = 0.102% of the NO present in the tank.

0.102% of 800 ppm is 0.82 ppm.

Each time a regulator is mounted on tank and not properly purged, the concentration of NO could be reduced by 0.82 ppm by diffusion of the Oxygen back into tank through the valve.

Conversely, NO_2 concentration could increase by 0.82 ppm each time.

As a tank empties, it becomes much more critical to observe correct procedures to prevent contamination of the gases. The effect of contamination is cumulative.

With 80 ppm calibration gases, as used in the lab, a full 2040 liter tank will contain approximately 16.32 ml of NO at 2000 psi.

Now 0.84 ml represents [(0.84 / 16.32) × 100]% = 5% of the NO present in the tank.

5% of 80 ppm is now 4 ppm.....very significant!

As a tank empties, this becomes more significant.

SMALL 97 LITER (SIZE 6R) TANKS:

97 Liter cylinder, 800 ppm NO in N_2 @ 1600 psi

Contains 77.6 ml of NO, balance N_2.

If the same regulator was used, 0.84 ml of NO now represents (84 / 77.6)% = 1.08% of the available NO.

1.08% of 800 ppm is 8.6 ppm.

The small silver transport regulators appear to have approximately 1 ml of dead space or about half that of the other regulators.

This still implies a 4.3 ppm change in NO and NO_2 concentrations.

NO by itself in nitrogen is stable. It does not decompose on its own.